Near Surface TCP Detonation Results In Safety and Process Improvements

John “JW” Segura
Global Product Line Manager, Perforating, Pipe Recovery, Intervention Services
2013

Weatherford®

Managing High Risk Incidents: Near Surface Detonation

Deployed an underbalanced Tubing Conveyed Perforating (TCP) Bottom Hole Assembly

- Two partially loaded 4.5” OD scalloped guns
- mechanical safety impact firing head
- fill flow sub, underbalance sub and test pressure sub.

While setting the BHA in the rotary slips and the perforating assembly at 76 m, the tubing was observed to shake and the sound of the perforating guns detonating was heard.

The operation was stopped, a safety review was conducted, and the BHA pulled to surface safely to verify the condition of the perforating assembly.

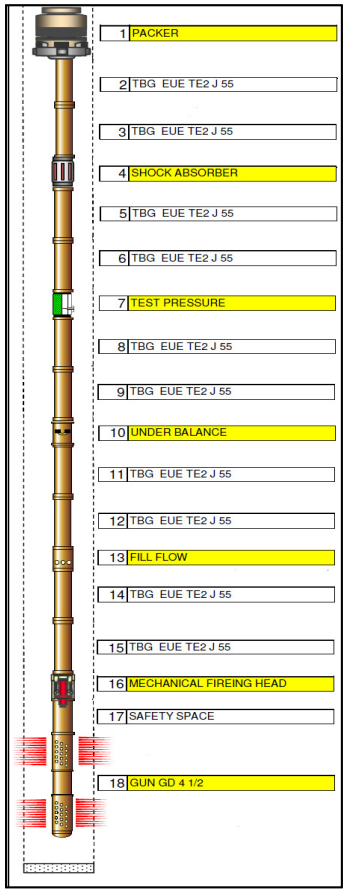

Managing High Risk Incidents: Near Surface Detonation

Observations

- The glass disk in the UB Sub was found to be intact
- The glass disk in the FF Sub was broken
- The MSIFH Release Rod was still pinned to the Body
- The explosives train had detonated high order

Managing High Risk Incidents: Near Surface Detonation Directive

TO: All Wireline / Tubing Conveyed Perforating Employees
FROM: John "JW" Segura, Global PL Manager Perforating & Pipe Recovery
DATE: 2012
SUBJECT: *Directive – Tubing Conveyed Perforating Firing Head Non-rebuild/redress*

Effective immediately Wireline services shall cease the practice of redressing or rebuilding Firing Heads used in Tubing Conveyed Perforating Operations.

Following the investigation of a near surface detonation with a Mechanical Safety Impact Firing Head, it has been recognized that redressing or rebuilding of TCP firing head is not the best practice for our operations and shall be discontinued.

A new firing head shall be supplied to each TCP operation string run in hole.
Integrity of the firing head shall be verified to prevent an accidental launch of the firing pin in the event of a sudden downward pipe movement.

Actions:

- Current supplies of firing heads shall be verified in each location and proper stock levels ordered and maintained for ongoing and future operations.
- Current manuals and operating procedures downloaded or obtained from the supplier for each type of firing heads used. Procedures shall be reviewed with a manager for each operation.
- Current firing heads in inventory shall be inspected to verify the assembly is properly pinned and the Retainer Balls are installed properly within the Retainer Ball Piston/Firing Pin assembly. The outer housing shall be removed, the assembly physically pulled as shown below to verify the retainer balls are inserted and intact, then reinstall the housing.

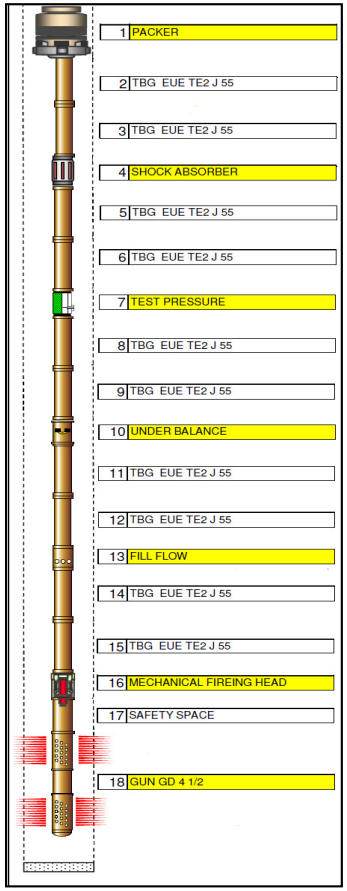

Managing High Risk Incidents: Safety Critical Components

TC-012-001-000 Release Rod

PF-130-0188-125 Roll pin: required to avoid azimuthal (rotational) movement of the release rod. It does not have a shear function.

PF-120-0188-150H Spirol®, Coiled Pin: required to retain the release rod in place and hence is the first barrier (mechanical) against the firing head activation. It is made of steel

ST-040-0188-000 Retaining Balls: The four retaining balls ensure that the firing pin is anchored to the release rod, guaranteeing the firing pin stays in the set position

12 holes are drilled azimuthally through the housing of the MSIFH. These holes allow the firing pin to be exposed to hydrostatic pressure inside

TC-012-0004-000 Ball Retainer Piston: The retaining balls lock this component to the release rod below. Preventing uncontrolled movement

OO00-N569-214 O-Ring, provides additional frictional force for which the application of hydrostatic force must overcome to move the firing pin

Air chamber, the application of hydrostatic force is required to overcome this compressed air to move the firing pin

TC-012-1500-099 Firing Pin: when the spirol pin is sheared and the firing pin is released, moved down under the applied hydraulic pressure the firing pin then sustains a mechanical impact on the percussion detonator, this then initiates the high order detonation of the explosives train

OOO-N569-214 O-Ring: prevents fluid from leaking into the air chamber

DET-3050-134-A Percussion Detonator: Secured in the TCP Detonator Sub. The 300 psi hydraulic force applied to the firing pin generates the 10ft-lbs impact force to the detonator to guarantee all fire

Managing High Risk Incidents: Safety Critical Components

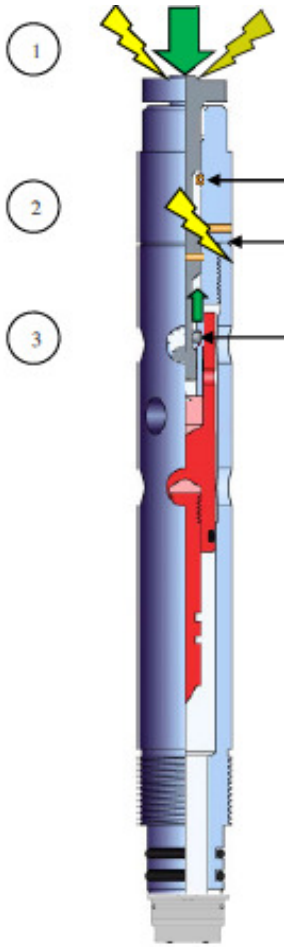

1) Drop Bar impact initiates sequence.

2) The shear pin is sheared by the impact allowing downward movement of release rod

3) Release rod downward movement positions relief area gap in retainer ball retract position

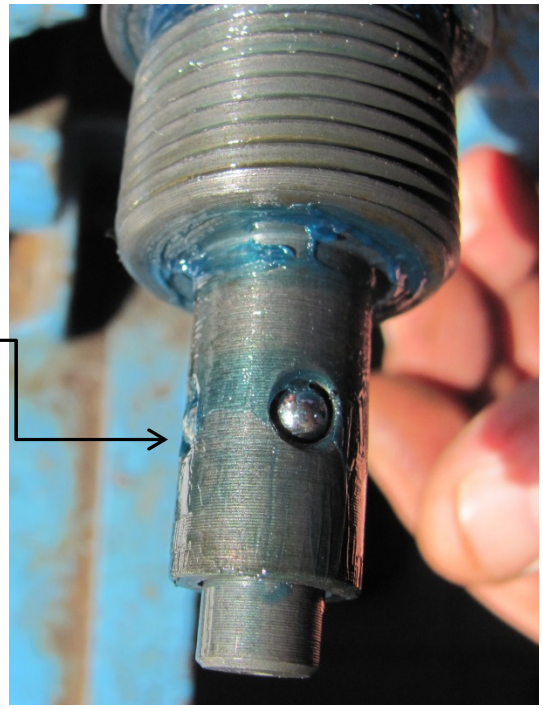

Managing High Risk Incidents: Safety Critical Components

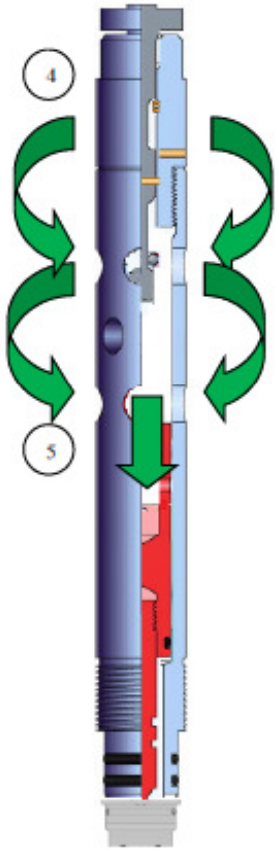

4) The pressure of the fluid inside the tubing exerts a force on the mass of the firing pin through the perforated sleeve

5) Retaining ball release allows hydrostatic force to drive the pin downward with sufficient force to initiate detonator

Managing High Risk Incidents: Safety Critical Components

The investigation determined that the firing head was redressed without a critical component, the retaining balls.

The firing pin had freedom to move

The subsequent impact of the tubing setting in the rotary slips was enough to release the pin and provide initiation force.

Managing High Risk Incidents: Remedial Operations

Operator initiated recovery of the 9-5/8” casing joint perforated and replaced joint

Successful pressure tests proved casing string integrity was restored

Managing High Risk Incidents: Consequences

Potential

Potential Consequence Injury:	**5 – CATASTROPHIC (Multiple Fatality) – In terms of the top tier event; surface detonation. It is understood in this specific case multiple fatalities were remote due to the application of the safety spacer sub and the status of the well, however consequence override is applied**
Potential Consequence Environmental:	1 – SLIGHT – Localised (Immediate area) temporary impact from loss of well fluids
Potential Consequence Reputational:	4 – MAJOR – Persistent national concern / Operations severely restricted
Potential Consequence Financial:	5 – MAJOR – Potential loss of long term contracts < US$50 Million & > US$10 Million
Likelihood:	C – POSSIBLE – Has occurred in the industry but not in the company, however this failure mechanism overrides to a higher likelihood
OVERALL RISK SCORE:	HIGH

Actual

Actual Consequence Injury:	**0 – No Injuries sustained**
Actual Consequence Environmental:	0 – No environmental impact sustained
Actual Consequence Reputational:	3 – SERIOUS – Medium term national concern. Venture or operations restricted or curtailed (operational shutdown)
Actual Consequence Financial:	3 – SERIOUS
Likelihood if uncorrected:	C – POSSIBLE – Has occurred in the industry but not in the company, however this failure mechanism overrides to a higher likelihood
OVERALL RISK SCORE:	MEDIUM

Managing High Risk Incidents: Contributing Factors

Tribal Knowledge

No.	Contributing Factors
	SUBSTANDARD CONDITIONS The company and / or location did not consider further control mechanisms were required for a consumable item. The implementation of a documented and appropriate No-Redress Policy would possibly have identified the need for further barriers to mitigate the risks involved with the failure of a safety critical device
CF1	**5.1 INADEQUATE INSTRUCTION / PROCEDURE A** • No pre-job inspection procedure existed to allow the engineer to verify that the firing head had not been redressed or otherwise to confirm a safety critical device was fit for deployment
CF2	**5.6 INADEQUATE TRAINING** • No component level training (to understand the parts and their specific function) was given to personnel to recognize deficiencies in the mechanism and to understand the requirement for or to develop a pre-job check procedure of a safety critical device, only functional training was identified
CF3	**5.1 INADEQUATE INSTRUCTION / PROCEDURE B** • No traceability process was developed to ensure that a safety critical device can be tracked from cradle to grave (lifecycle process)
CF4	**5.1 INADEQUATE INSTRUCTION / PROCEDURE C** • No specific disposal process was implemented as part of the No-Redress Policy to ensure that a consumable safety critical device could not reenter operational service

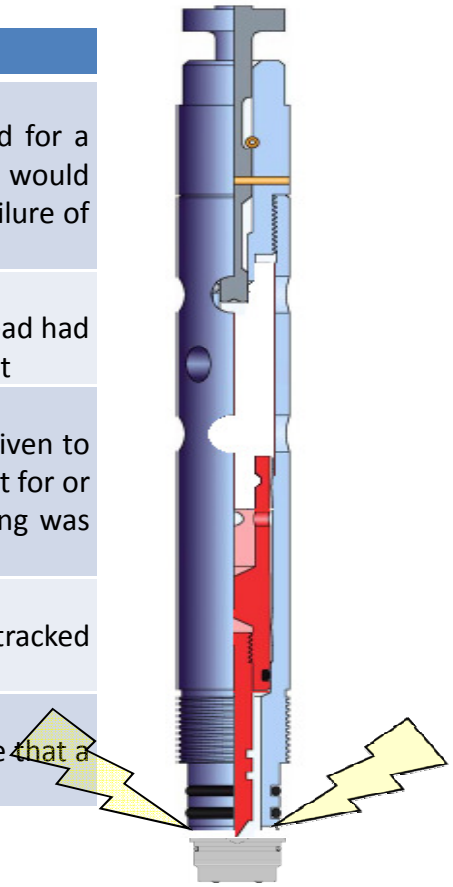

Managing High Risk Incidents: Contributing Factors

Adequate Training and Understanding

No.	Contributing Factors
	SUBSTANDARD ACTIONS Failing to incorporate the retaining balls into the firing head when redressing the head, these were not available at the location in any case. From the available evidence however it has been determined that the act of redressing the firing head was not malicious in intent, and due to the lack of documented policy cannot be interpreted as negligence. In summary it is highly probable that some level of confusion existed between different versions of the firing heads
CF5	**1.1 PRACTICE NOT FOLLOWED** • The person that redressed the firing head failed to follow the ”practice” of not redressing firing heads that was demonstrated as being implemented to a significant degree at the location

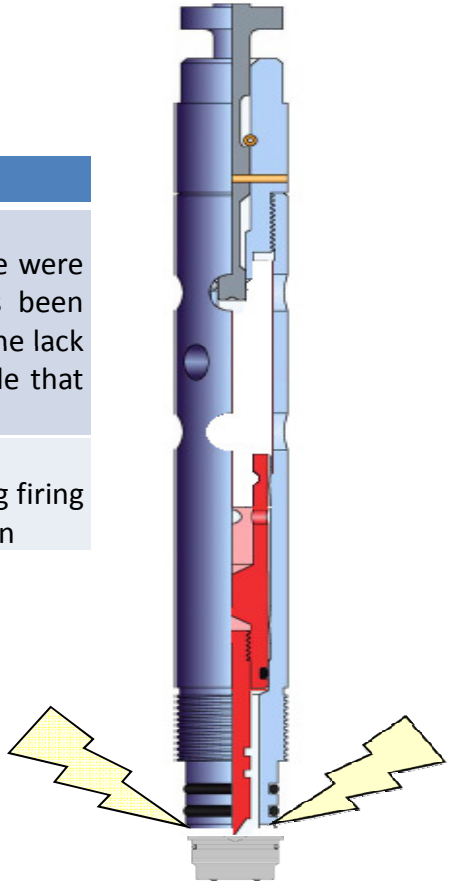

Managing High Risk Incidents: Root Cause

Written Policies – Documents in Local Language

No.	Root Cause
RC1	**R22.2 Inadequate Development of Standard / Policy:** • There is no evidence at the location of a documented No-Redress Policy • According to interviews of the relevant personnel involved in the incident there was a general understanding at the location that MSIFH were not to be redressed • Accountancy and comparison of the transactions in part numbers from the digital inventory system against the number of these job types recorded in the operations management system corroborates to a significant if not absolute degree, demonstrating that this verbal policy was in place

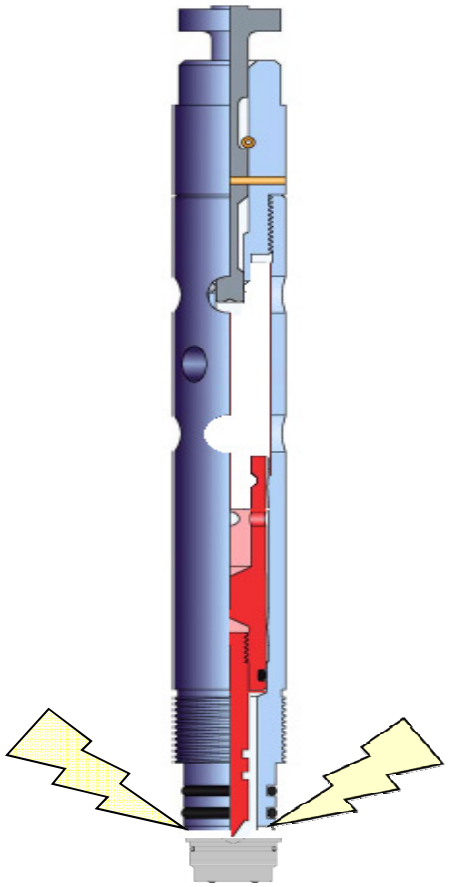

Managing High Risk Incidents: Corrective Actions

Inspection and Controls

Cause Code	Corrective Action Item
CF1 CA1	Pre-job inspection (QA/QC) Procedure to be conducted in a controlled area then security sealed once completed
CF2 CA2	MSIFH Component level and inspection training (completed for current primary crew members, location will continue to advance training for all others outside this corrective action)
CF3 CA3	Unique Identity numbers to be applied to all firing heads (decision taken on future stock, minimum requirement to serialise existing firing heads)
CF3 CA4	Final confirmation from the location that no existing firing heads exist outside the inventory, all current inventory has been inspected as per pre-job QA/QC
CF4 CA5	Return and disposal procedure
CF5 RC1 CA6	Creation of a firing head control Policy to include as a minimum the requirements stated in the remedy of CF1, CF2, CF3 and CF4

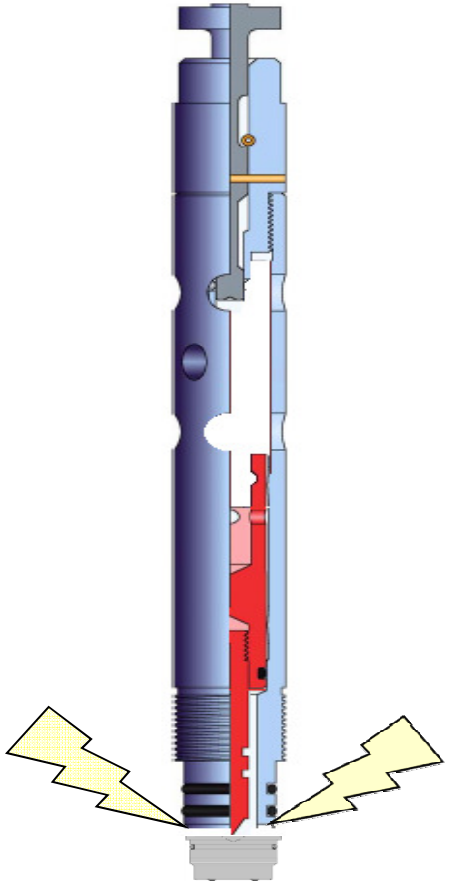

Managing High Risk Incidents: Corrective Actions

TCP Firing Head Inspection and Certification Procedures

The following process and procedures will be followed when receiving, assembling, or redressing any TCP Firing Head, new or used.

Serialization of Assemblies:

New Firing Heads – Beginning on (Date) you can expect all new assemblies to have a unique serial number on each assembly and critical part. Until that time you will need to scribe a locally issued serial number to the assembly and critical parts. Use the following format to develop your local serial number system that you will maintain in an excel file.

Three letter abbreviation for the district
4 digits for the year
4 digits for the unique identifier
Example: Alice, Texas – ALI-2012-0001, ALI-2012-0002, ETC.

Used Firing Heads – After the critical parts have passed inspection, the assemblies and critical parts will need to be serialized using the above format and marked in the inspection record file and serial number file as a used recertified assembly.

Inspection Record Files – Each firing head will have a unique excel workbook with multiple tabs for the critical parts, assembly drawing, and pressure test procedures (if required). The file names should follow this format: Firing Head Name – Serial Number

For example: Alice, Texas PAFH – File name would be PAFH ALI-2012-0001
Or: Alice, Texas Ball drop Firing Head – File name would be BDFH ALI-2012-0002
The tabs within the workbook will be named as the serial number of the critical part. If the critical part is replaced within the assembly the replacement date will be noted on the original tab and a new tab with the new serial number will be created in the same file/workbook.

Managing High Risk Incidents: Corrective Actions

Dimensional Measurements

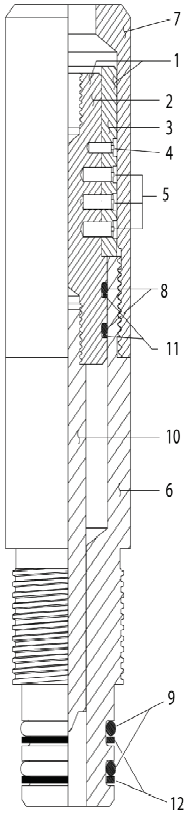

Pressure Actuated Firing Head Part (Part number)			Serial number		Certified Rebuilder					
	Dimension	Eng. Drawin	New Part	RUN 1	RUN 2	RUN 3	RUN 4	RUN 5	RUN 6	RUN 7
DIMENSIONAL DRAWING IN THIS SPACE WITH MEASUREMENT POINTS DESIGNATED AS DIMENSION A, B, ETC.	A									
	SIGNATU RE DATE									
	B									
	SIGNATU RE DATE									
	C									
	SIGNATU RE DATE									
	D									
	SIGNATU RE DATE									
	E									
	SIGNATU RE DATE									
	F									
	SIGNATU RE DATE									
	G									
	SIGNATU RE DATE									

Managing High Risk Incidents: Corrective Actions

Critical Parts

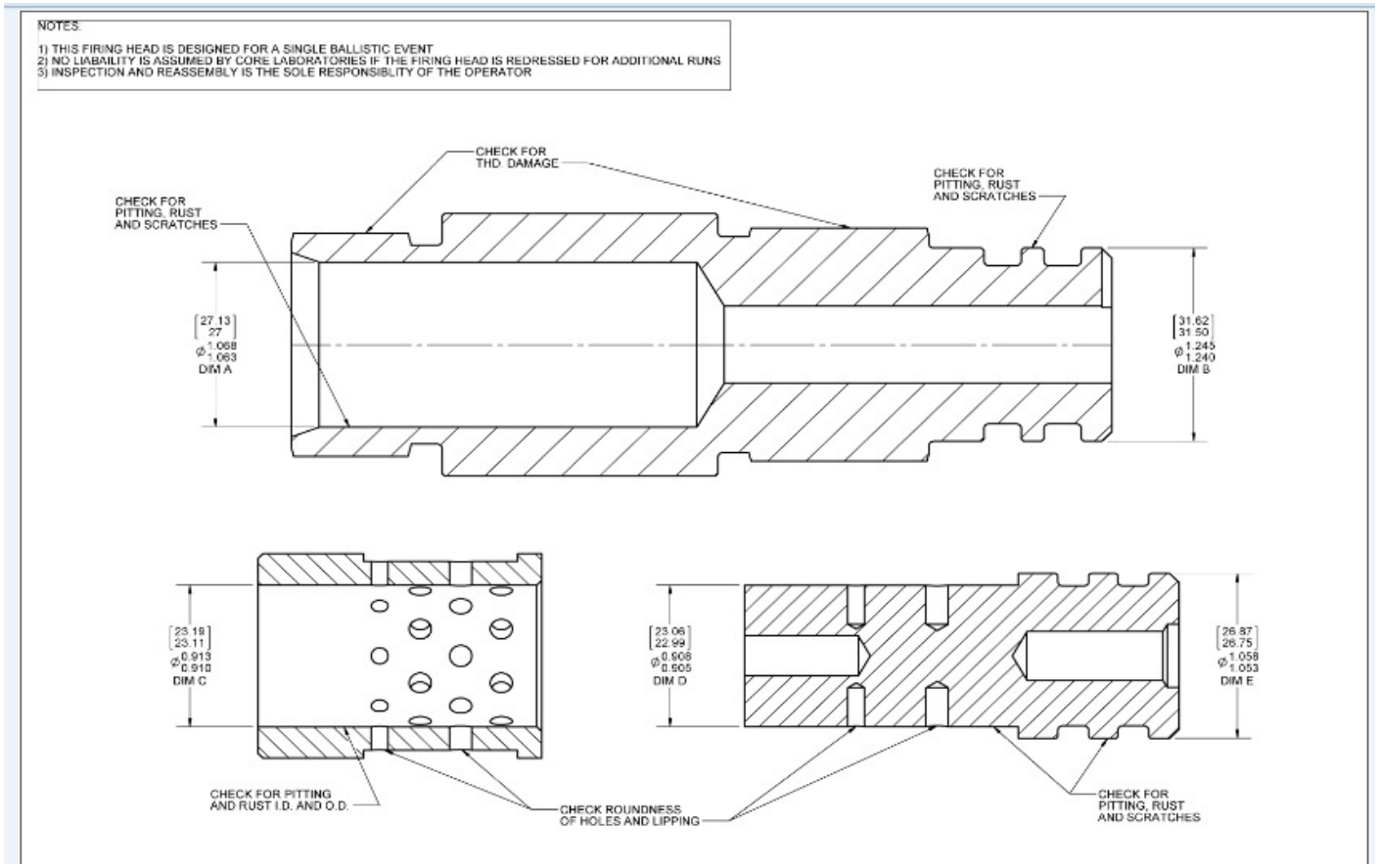

Managing High Risk Incidents: Corrective Actions

Training and Certification

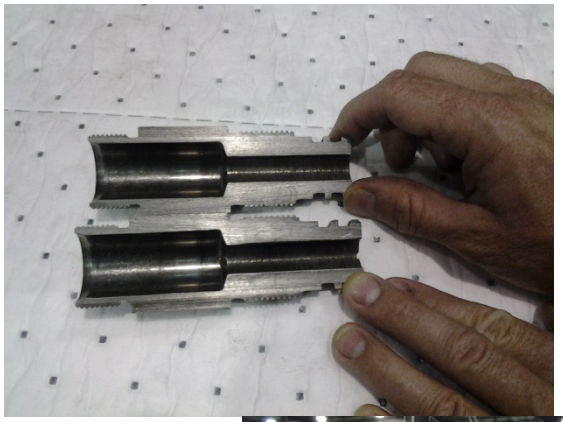

Managing High Risk Incidents: Corrective Actions

API RP 67

9 Tubing Conveyed Perforating (TCP) and other Non-electric Line Conveyed Operations

9.2.3 Mechanical/Percussion Firing Heads

Firing heads that will be exposed to pressure while at surface shall include a safety feature to prevent explosive device initiation by an accidental over-pressurization while at surface.

Exception: Such a feature shall not be required if the firing head is to be used in timer mode and no explosive device will be connected while at surface (e.g., when the firing head is to be armed, deployed into the well, and latched onto an explosive device that has been previously deployed and positioned at depth).

9.2.4 Hydraulic/Pressure-actuated Firing Heads

Hydraulic and pressure-actuated firing heads that are to be connected to an explosive device at surface shall be tested to 1.2 times the maximum surface pressure expected at any time during deployment prior to being connected to the explosive device.

9.2.5 Safety Sub(s)

A safety spacer or blank gun section shall be installed between each gun assembly (or explosive device) and firing head to position the loaded portion a safe distance below the rig floor during arming and disarming operations. The minimum spacer length should be 10 ft (3 m). In some cases, a longer spacer will be required to position the loaded assembly safely below living quarters or other occupied areas. A safety spacer may not be required when running a bottom-up firing system (see 9.3.3). The connection between the firing head and the safety spacer should be the last connection to be made up when running in hole.

Managing High Risk Incidents: Corrective Actions

Training and Certification

- Specialist, Tubing Conveyed Perforating C5123 (SPECIALIST, TUBING C5123)
- TCP Specialist Annual (Re)-Certification Evaluation – 1 Year Recertification (TCP SPECIALIST ANNUA54)
- Tubing Conveyed Perforating (Tubing-Class-Catalog_1182)
- Tubing Conveyed Perforating (TCP) Firing Head Inspection Certification - 2 years (TUBING CONVEYED
- Tubing Conveyed Perforating For Account Managers (TUBING CONVEYED PERF4591)

- Evaluation - Level 1 Testing and Production Services Tubing Conveyed Perforating
- Evaluation - Level 2 Testing and Production Services Tubing Conveyed Perforating

Near Surface TCP Detonation Results In Safety and Process Improvements

John “JW” Segura
Global Product Line Manager, Perforating, Pipe Recovery, Intervention Services
2013