2012 European and West-African Perforating Symposium

SPE144167

Evaluation and Design of Shaped Charge Perforators, and Translation to Field Applications

J. Hardesty, M.R.G. Bell, and N.G. Clark, GEODynamics, Inc.

T. Zaleski and S. Bhakta, INGRAIN, Inc.

Outline

- Introduction
  - Perforation Performance Evaluation
  - Perforation Geometry and Implications
- Laboratory Evaluation
  - Berea Sandstone
  - Castlegate Sandstone
  - Mancos Shale
- Field Application
- Conclusions

Perforation Performance Evaluation

- Historical Objectives:
  - Inexpensive and Repeatable Testing
  - Simple Translation to Field Performance
  - Predictive Software Models
  - Simple Tunnel Geometry for Analysis

- Results:
  - Oversimplification of Geometry
  - Extrapolation of Penetration Translation

Perforation Performance Evaluation

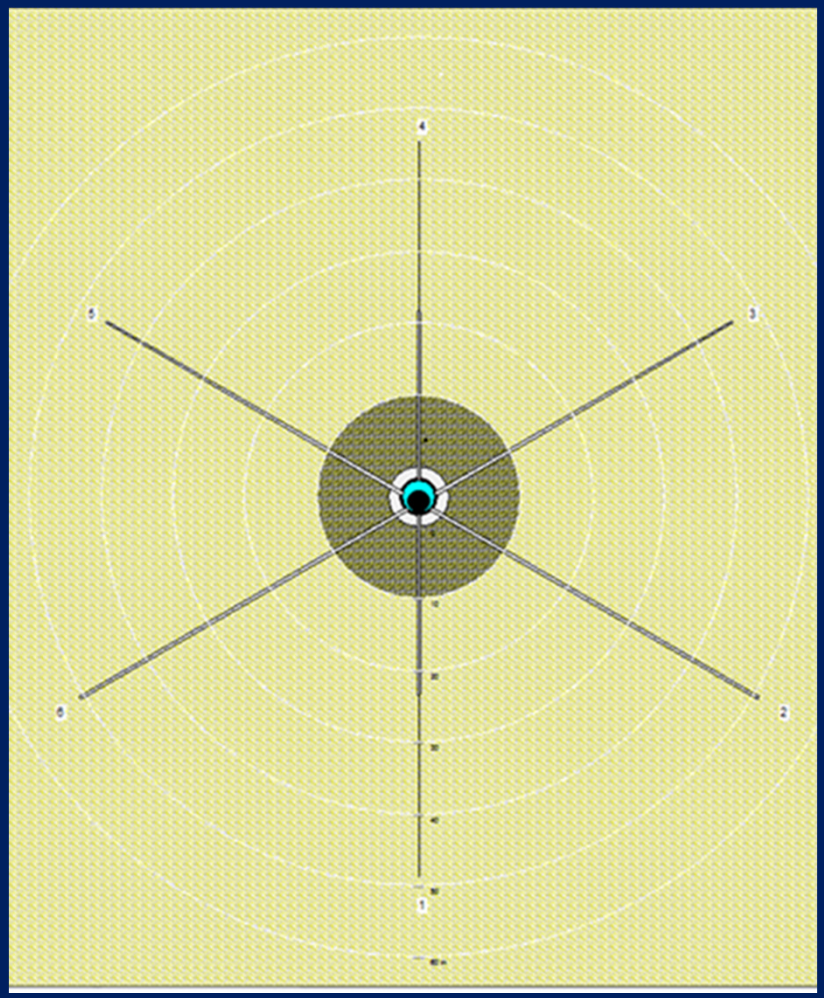

- 22.7 g Charge
- API Cement 39.02”
- 8” Borehole
- 10” Damage Radius

- Perforations Far Field
- Commodity Selection
- Assumed Open
- Doesn’t Match Reality

Perforation Performance Evaluation

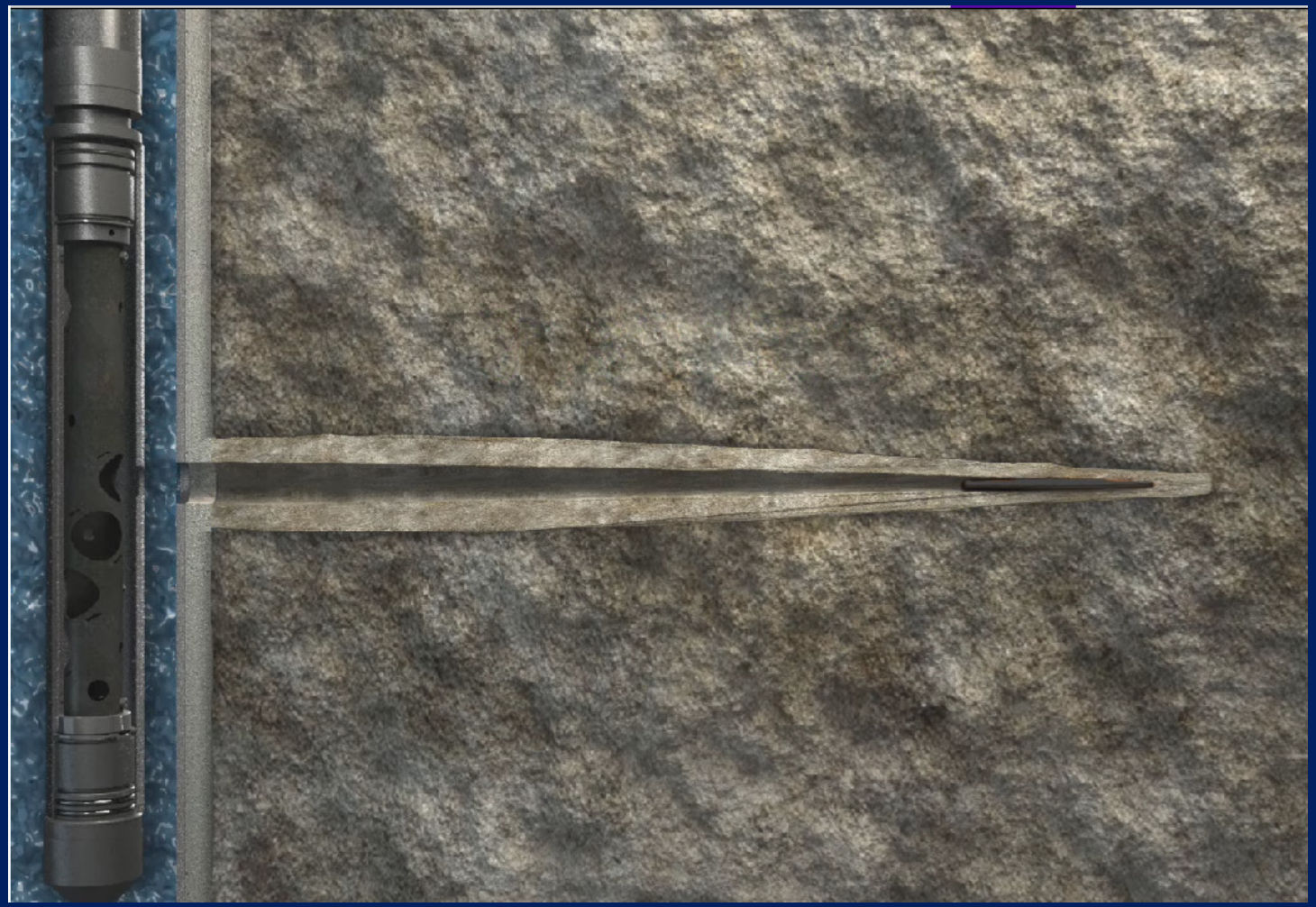

Perforation Geometry

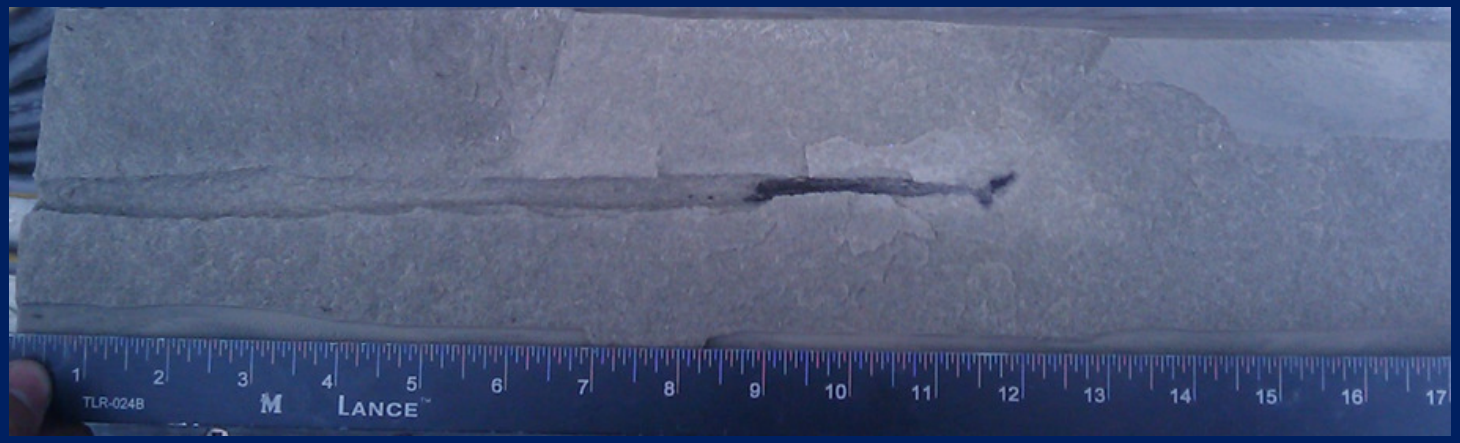

Reactive Perforating

- Designed for improved tunnel geometry
- Intermetallic reaction between charge liner materials, triggered by detonation pressure
- Exothermic reaction
  - Heats tunnel volume & near-tunnel pore space
  - Consumes supporting liner material
- Breaks up and expels debris from tunnel
- Effect occurs in each tunnel, independently
- Clean tunnels with less reliance on surge

Perforation Performance Evaluation

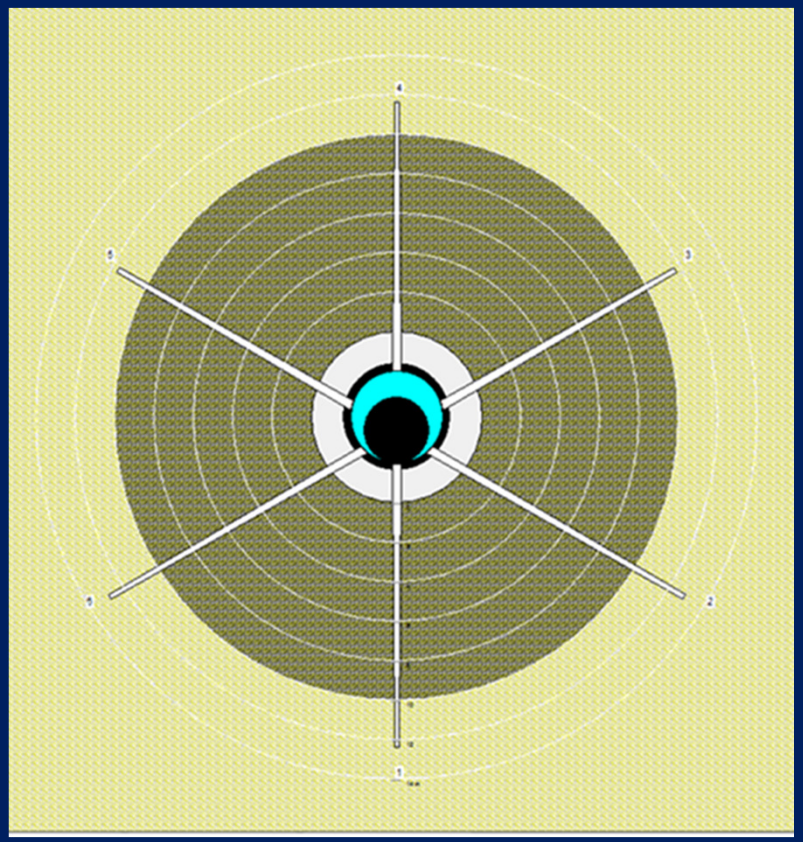

- 22.7 g Charge
- Cement Pen
- 8” Borehole
- 10” Damage Radius

- Perforations Near WB
- Performance Valuable
- Geometry Important
- Testing Useful

Laboratory Evaluation: Procedure

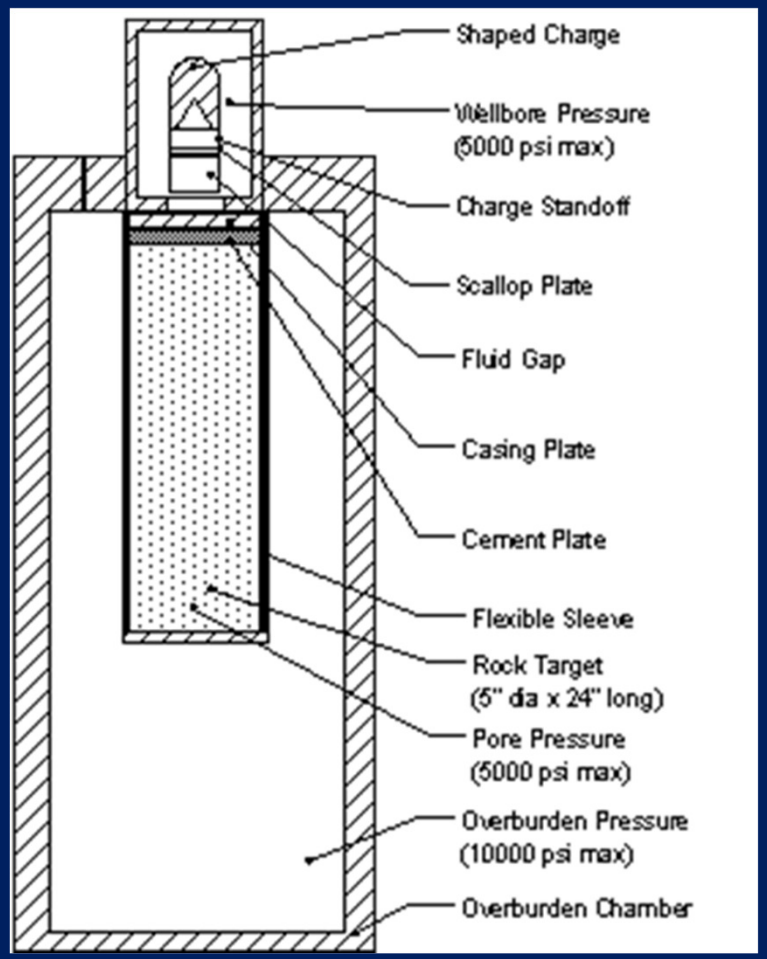

- 5” x 18” Targets
- OMS Working Fluid
- Axial Flow Permeability
- 1000 psi Back Pressure
- Overburden: 8000 psi
- Pore: 4000 psi
- Wellbore: varies
- Axial Flow Evaluation
- Slight Dynamic OB

Laboratory Evaluation: Procedure

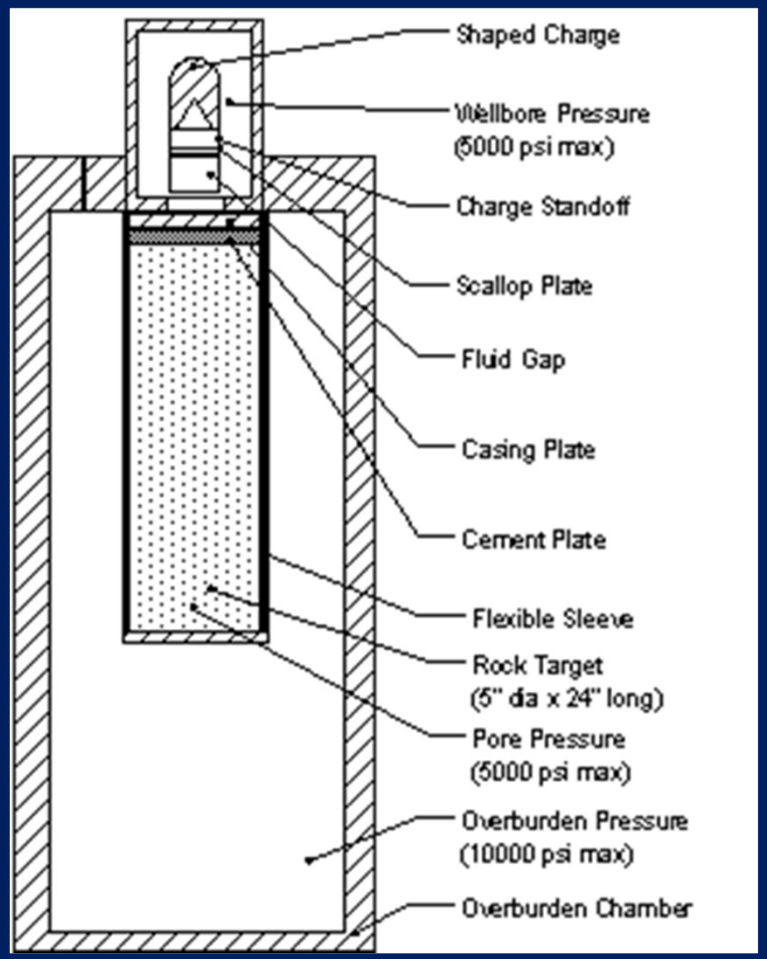

- Axial Flow Evaluation
- Minimal Dynamic OB
- Production Ratio Flow Evaluation
- Perforations Measured and Targets Split
- Tunnels Unaltered

Laboratory Evaluation: Berea Sandstone

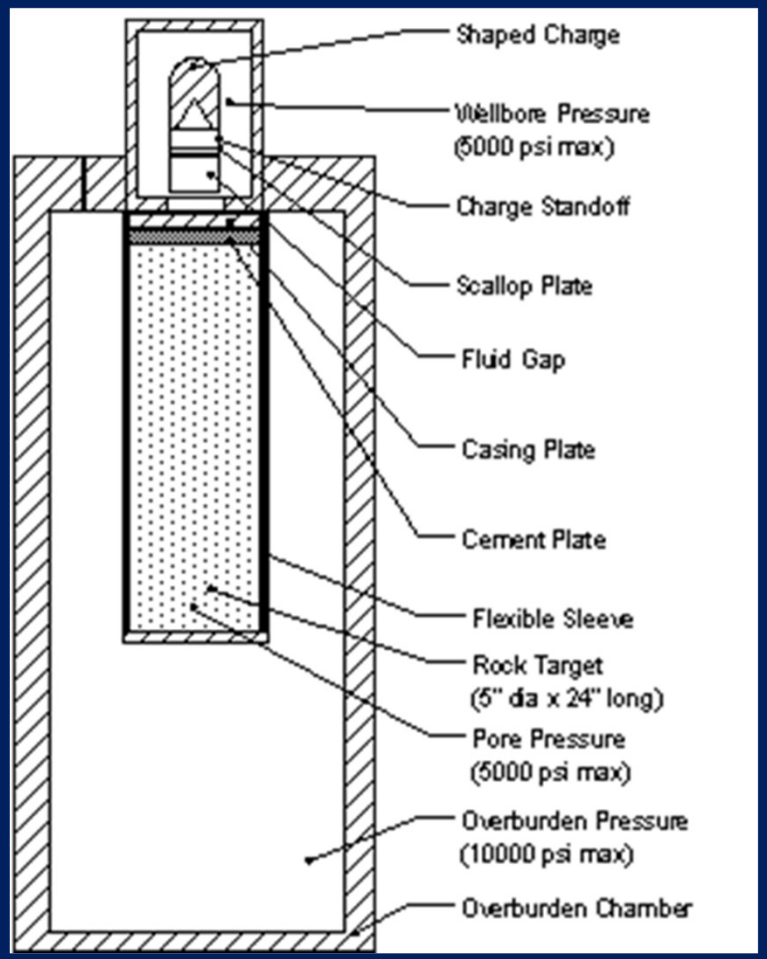

- 15g HMX Conventional Baseline:
- API RP 19B 35.1”
- Berea Sandstone
  - 100-150 mD
  - 19% porosity
  - 7000 psi UCS
- Typical Penetration:
  - 8-9 inches
  - Insensitive to initial balance

Laboratory Evaluation: Berea Sandstone

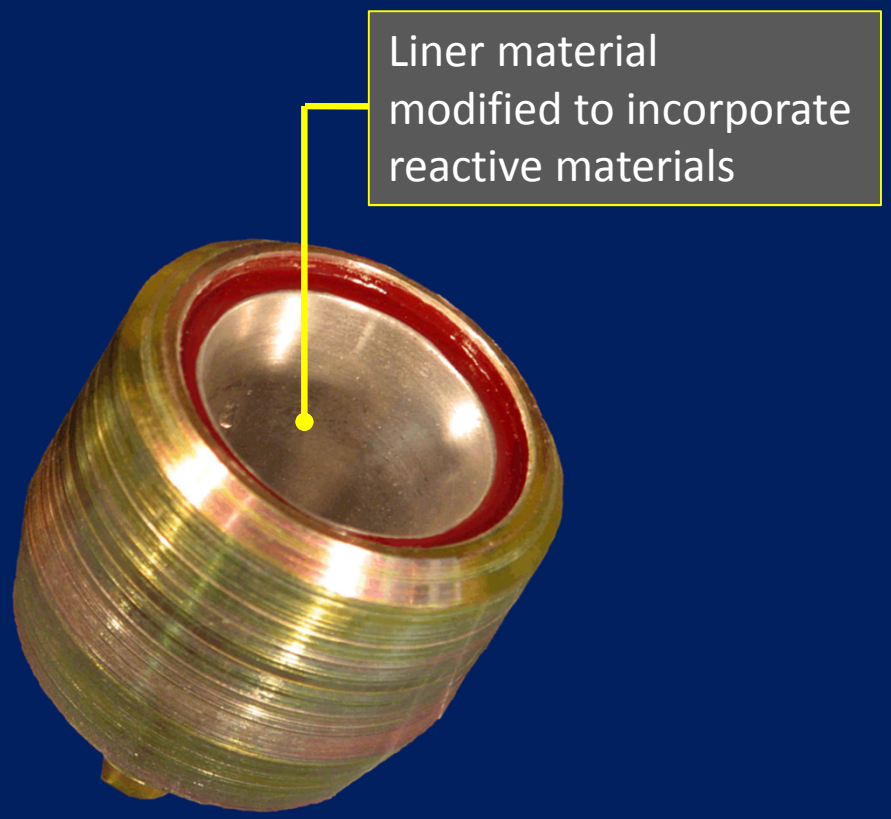

- 15g HMX Reactive
- Reactive Component:
  - Applies Radial Mechanical and Thermal Energy
  - Prevents formation of wedged target pack
  - Causes Clean up and Fractures
- Design Criteria:
  - Equal or Better Penetration in 7K-10K UCS Sandstone
  - Improved Geometry
  - Improved Flow

Berea Sandstone at Maximum Overbalance

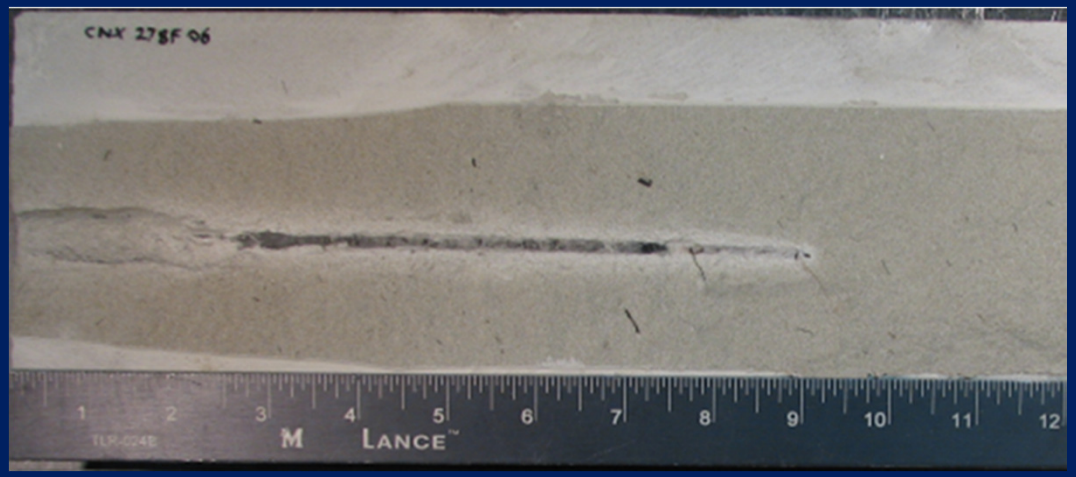

Berea Sandstone Flow Performance

Charge	Balance (psi)	Pen. (in)	Permeabiliy (mD)	Post S Flow (mD)	PR -	Flow Imp. -
2715 Conventional	1000	9.20	142	60	0.42	
2715 Reactive	1000	8.20	143	106	0.74	76%
2715 Conventional	500	6.20	106	53	0.50	
2715 Reactive	500	8.60	106	86	0.81	61%
2715 Conventional	0	8.85	130	79	0.60	
2715 Reactive	0	9.05	111	102	0.92	52%
2715 Conventional	-500	9.05	113	88	0.79	
2715 Reactive	-500	9.10	140	170	1.22	55%

Berea Sandstone Flow Performance

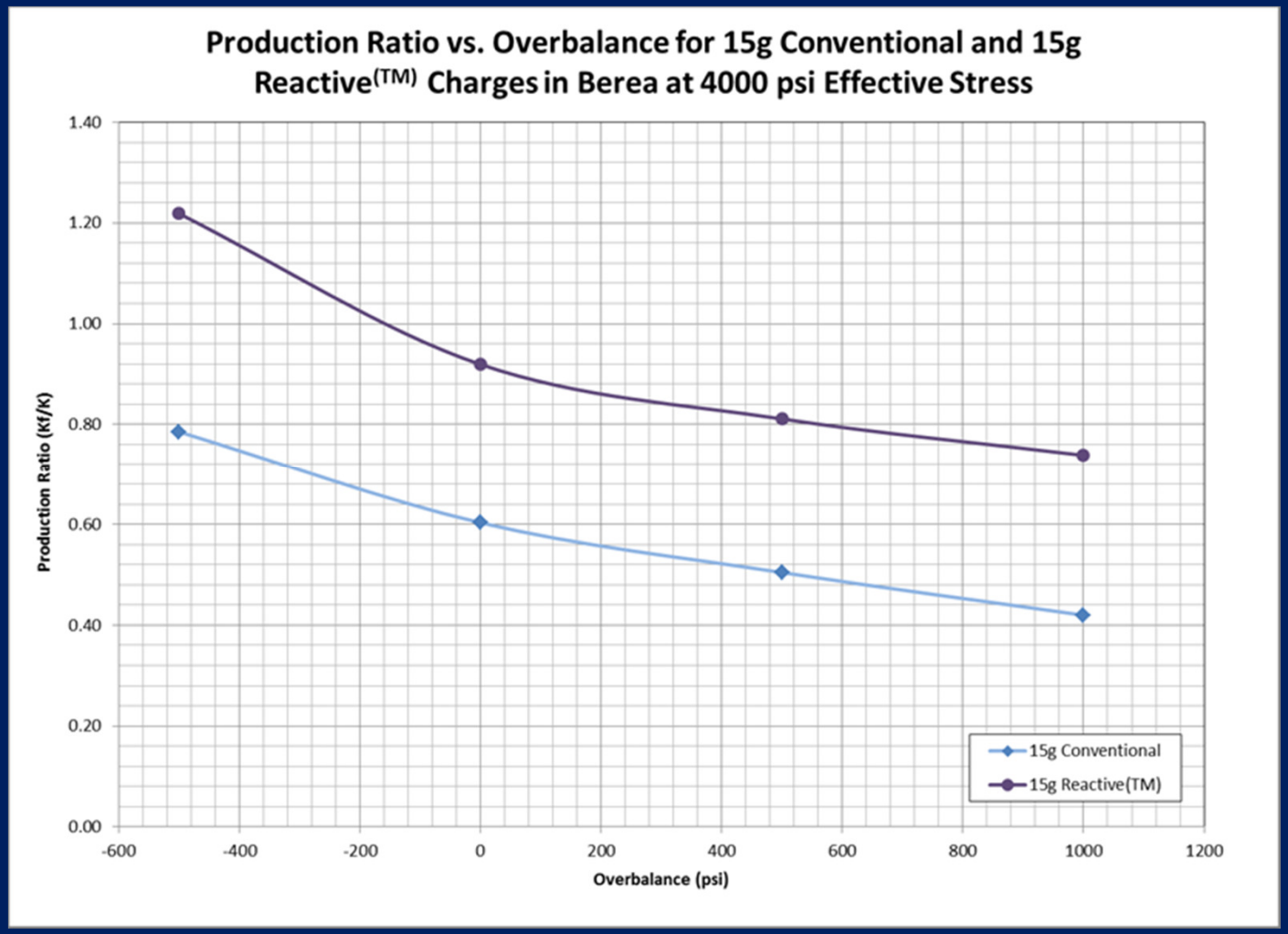

Laboratory Evaluation: Berea Sandstone

- Flow Performance is 55% to 76% superior to the conventional charge at every balance condition.
- Reactive Charge at 1000 psi overbalance performed equivalently to the conventional charge at 500 psi underbalance.
- With slight underbalance, the reactive perforation tunnel flow performance surpasses 1.0 Production Ratio.

Lab Evaluation: High Perm Sandstone

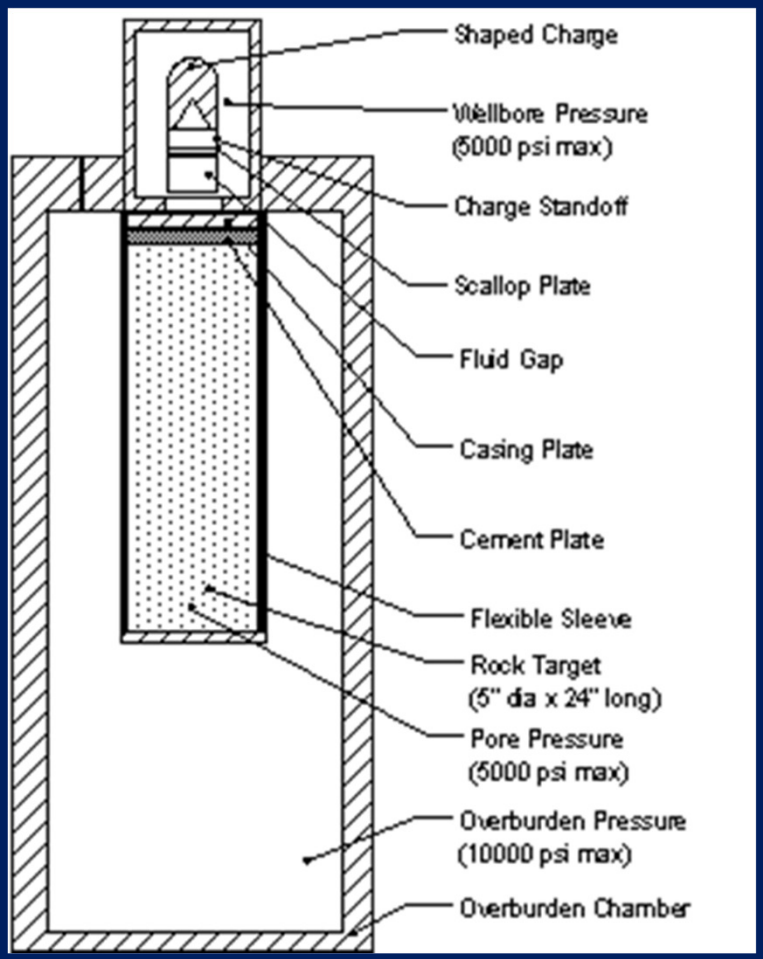

- 15g HMX Conventional Baseline:
- API RP 19B: 35.1”
- Castlegate Sandstone
  - 700-900 mD
  - 20-21% porosity
  - Less than 5000 psi UCS
- Typical Penetration:
  - 10-13 inches
  - Insensitive to initial balance

Lab Evaluation: High Perm Sandstone

- 15g HMX Reactive HP
- Reactive Component:
  - Redesign of standard Reactive Charge
  - Reactive Component modified for optimal geometry in Castlegate Sandstone
- Design Criteria:
  - Increase Penetration over standard Reactive
  - Improve Geometry and Flow Performance over Conventional

Castlegate SS at Balanced Condition

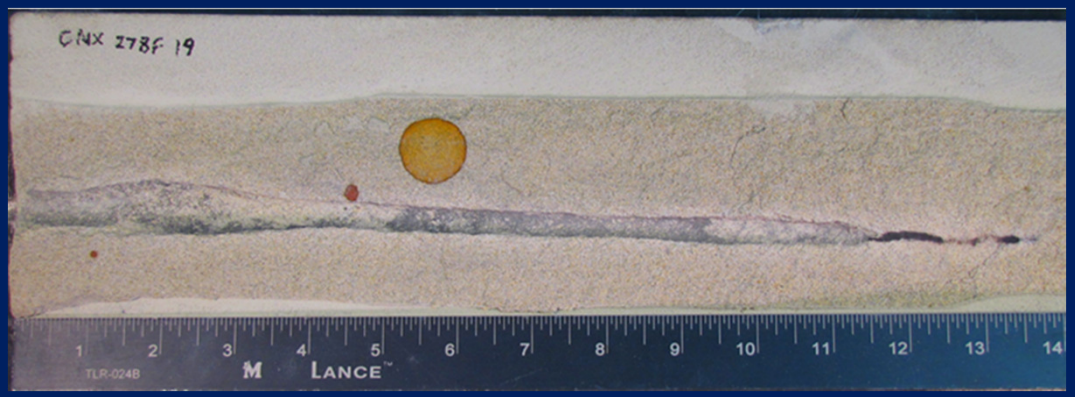

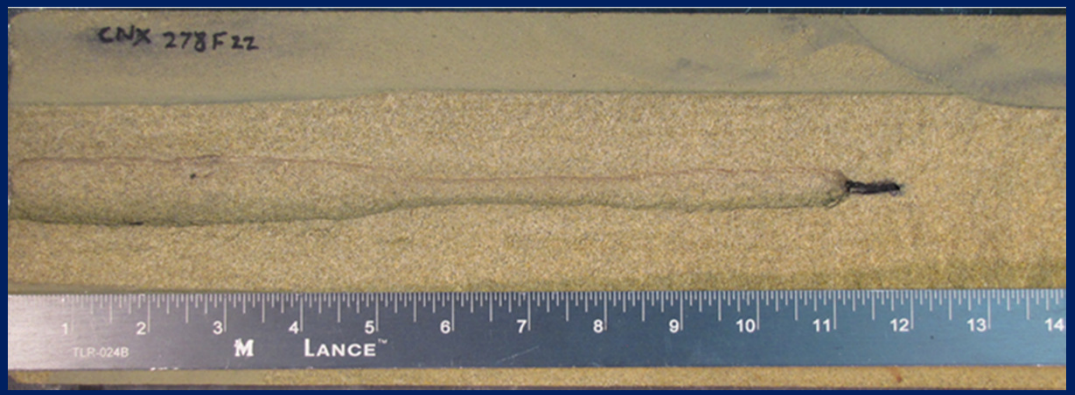

Castlegate Sandstone Performance

Charge	Balance (psi)	Pen. (in)	Permeabiliy (mD)	Post S Flow (mD)	PR -	Flow Imp. -
15g Conventional	1000	12.40	750	432	0.58	
15g Reactive	1000	10.90	830	760	0.92	59%
15g Conventional	0	13.70	660	890	1.35	
15g Reactive	0	10.90	870	1246	1.43	6%
15g Conventional	-500	11.67	776	960	1.24	
15g Reactive	-500	9.55	899	1476	1.64	33%

Castlegate Sandstone Flow Performance

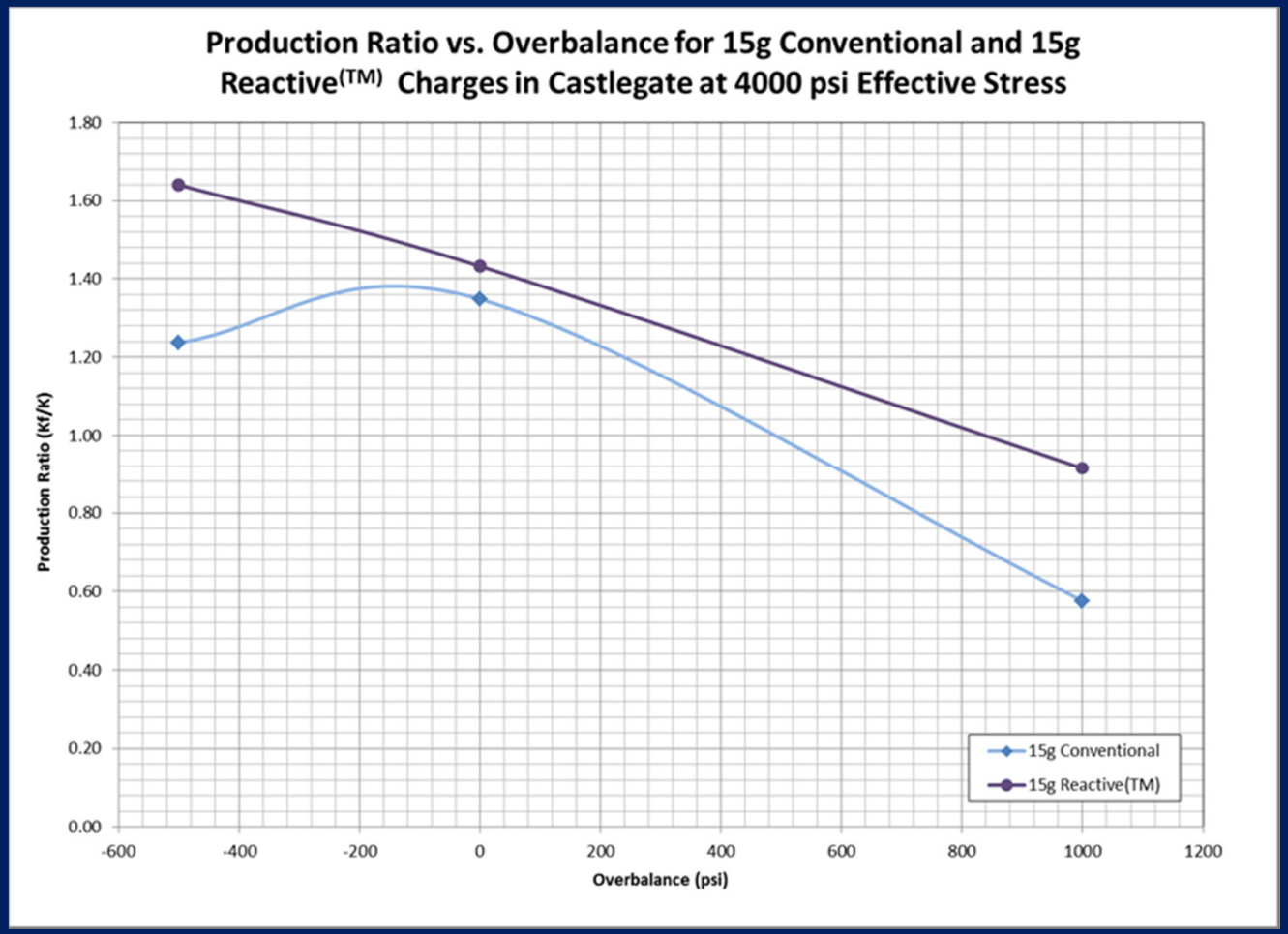

Laboratory Evaluation: Castlegate

- Flow Performance is 6% to 59% superior to the conventional charge at every balance condition.
- Optimized Reactive Charge provided a PR of 0.92 at overbalance condition.
- Conventional charge produced deeper tunnels, however reactive design produces cleaner perforations, with better side wall condition.

Lab Evaluation: Mancos Shale

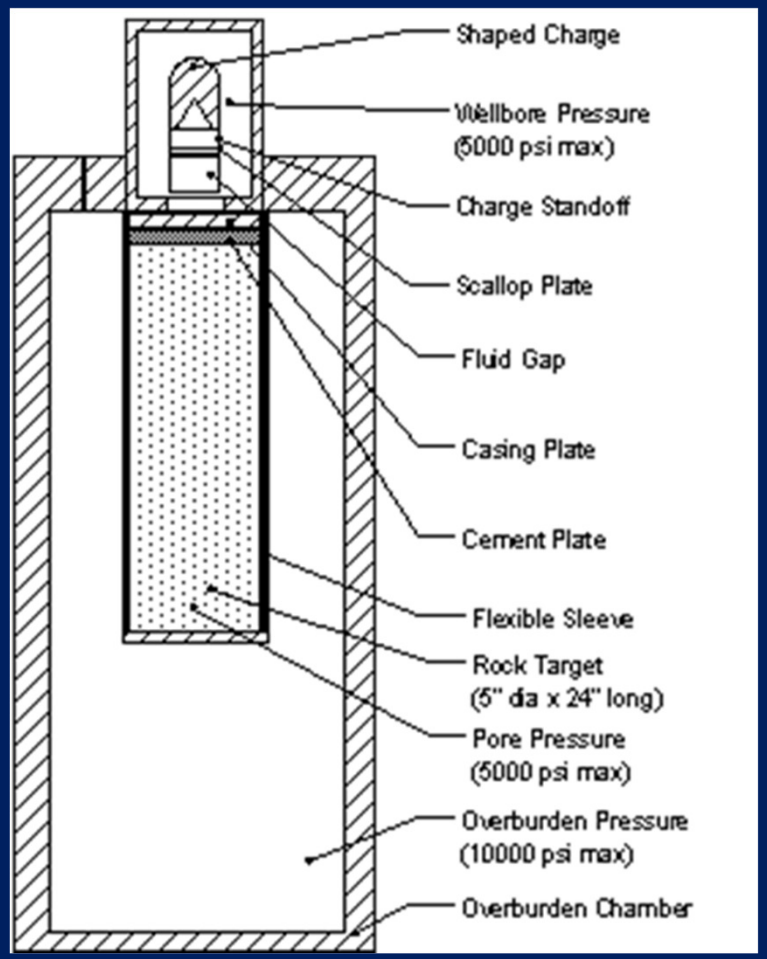

- 15g HMX Conventional Baseline:
- API RP 19B: 35.1”
- Mancos Shale
  - Low Permeability
  - Low Porosity
  - Geometry Evaluation
- Typical Penetration:
  - 7-8 inches

Lab Evaluation: Mancos Shale

- 15g HMX Reactive HP
- Reactive Component:
  - Standard Design Reactive Charge
  - Design Optimized for 10mD to 300 mD Sandstone
- Design Criteria:
  - Equal or Better Penetration in 7K-10K UCS Sandstone
  - Improved Geometry
  - Improved Flow

Mancos Shale Perforation Geometry

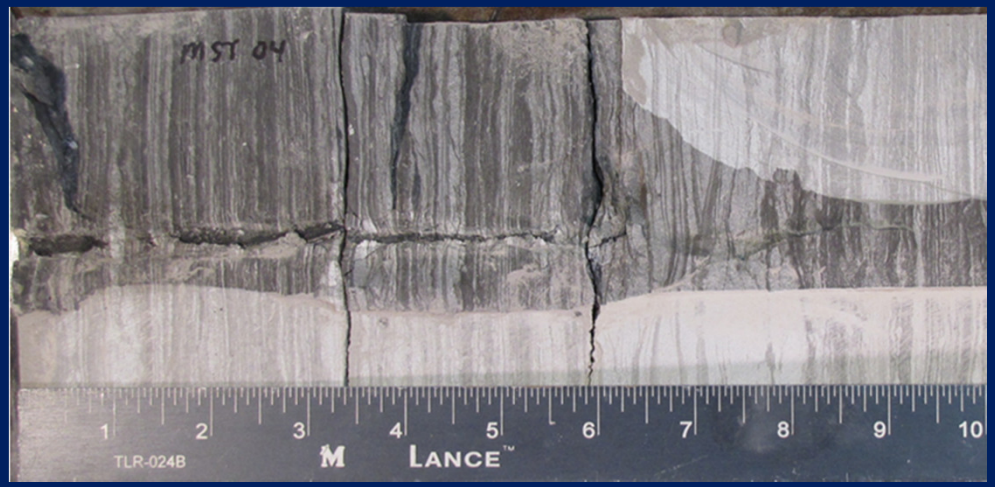

Mancos Shale Performance

Charge	Balance (psi)	Open Tunnel(in)	Pen (in)	% Clear (%)	Max Tunnel Dia (in)	Tunnel @ 90% (in)	Tunnel Imprvmt
15g Conventional	500 Under	2.55	6.5	39%	0.18	0.17	
15g Reactive™	500 Under	6.10	6.4	95%	0.32	0.21	139%
15g Conventional	Balanced	1.70	7.8	22%	0.27	0.16	
15g Reactive™	Balanced	6.95	7	99%	0.3	0.12	309%
15g Conventional	500 Over	2.60	8.1	32%	0.23	0.09	
15g Reactive™	500 Over	6.25	7.2	87%	0.29	0.19	140%

Laboratory Evaluation: Mancos Shale

- Open Tunnel not sensitive to initial balance condition.
- Penetrations similar, with conventional charges having slightly deeper penetration at every condition.
- Reactive charges show increased open tunnel lengths ranging from 140% to 300% improvement.
- Reactive have larger diameter tunnels.

Design Methodology – Field Results

- 14 Wells completed by CNX between May 2008 and October 2009
- Chattanooga Shale
- 4-9 Fracture Stimulations
- Treatment Sizes
  - 15,000 to 30,000 gallons
  - 50,000 to 100,000 lbs. of proppant
- Stimulation and Production data for 81 stimulation stages

Field Results – Breakdown Pressure Red

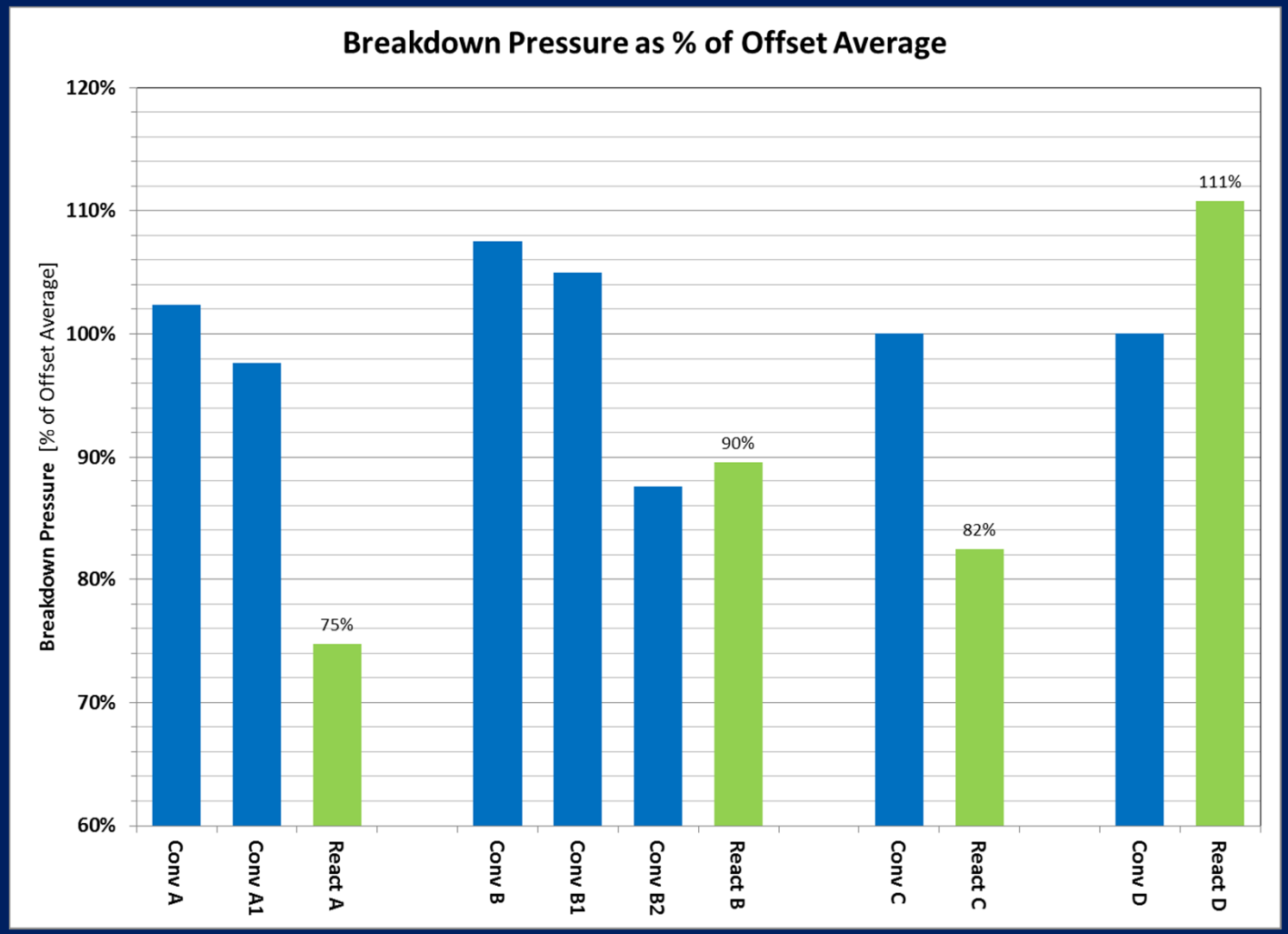

Field Results – Treating Pressure Reduction

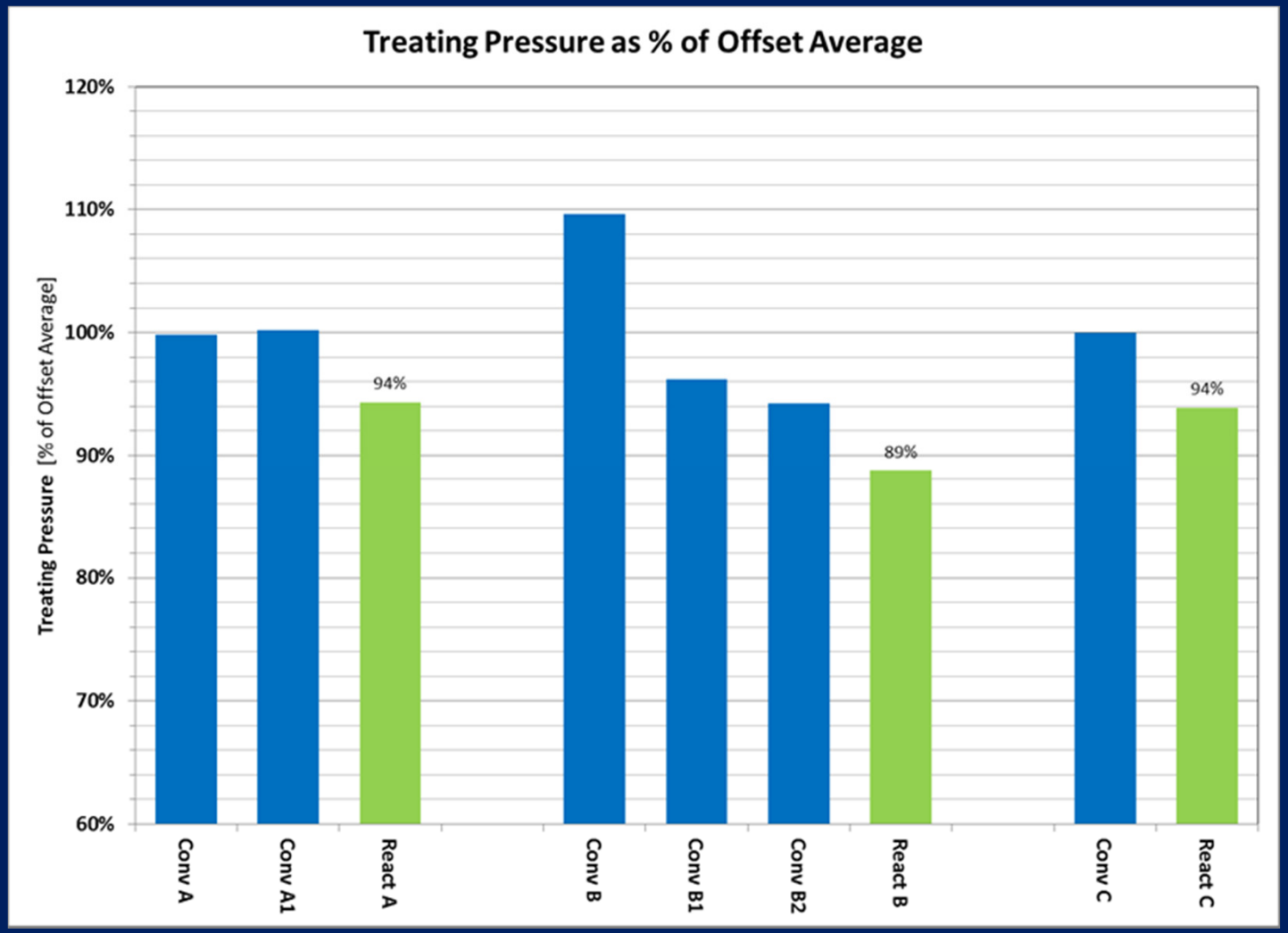

Field Results – Productivity Improvements

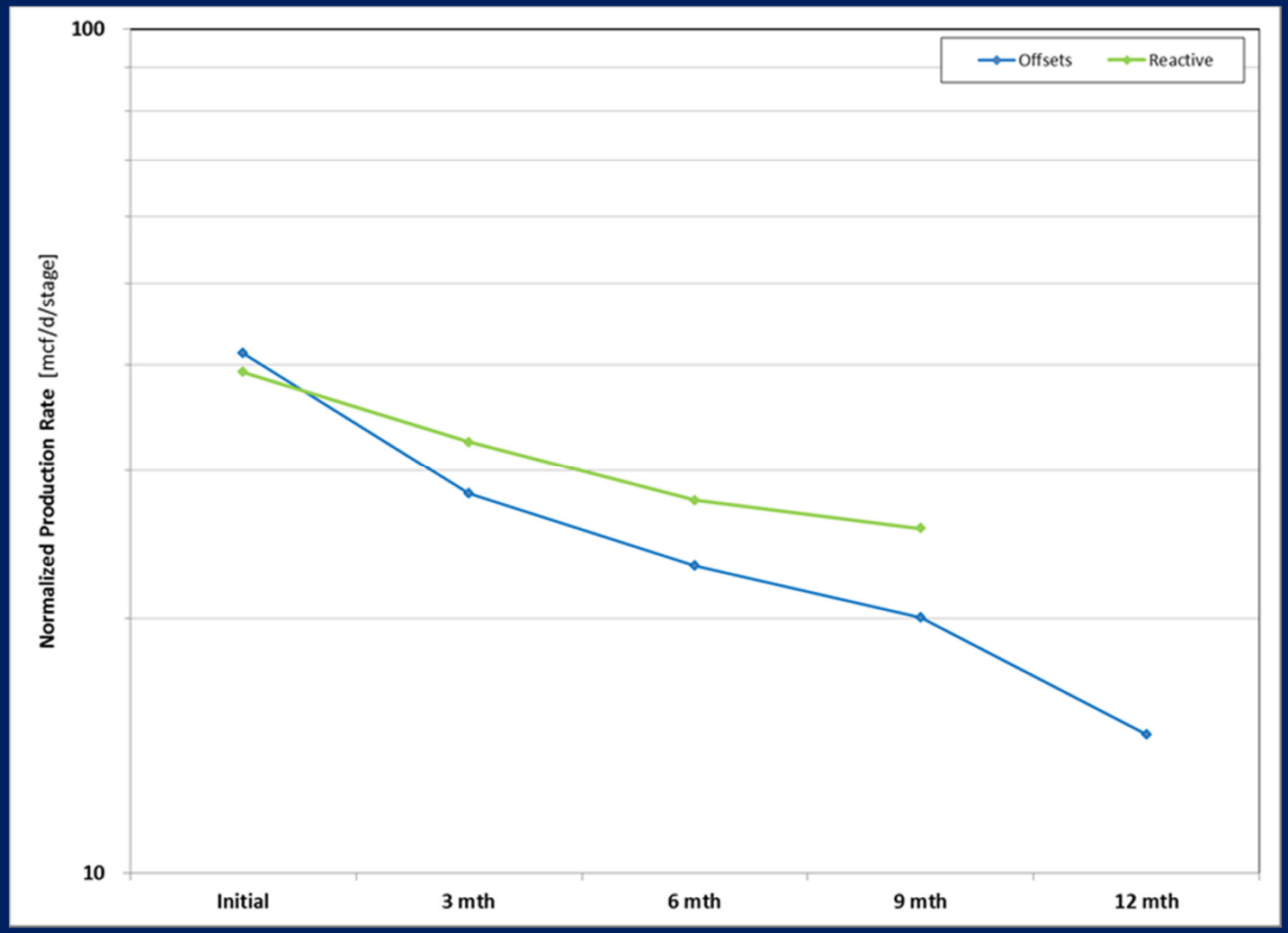

Field Results – Offset Comparison

- 4 Offset Groups
- 13% to 29% Reduction in Breakdown Pressure
- 6% to 15% Reduction in Treatment Pressure
- Improvement in Early Productivity Decline

Conclusions – Near Wellbore

- Perforating system design and technology is important for many completion applications
- Overreliance upon cement penetration and penetration models has caused lost production.
- The interaction of perforation geometry with near wellbore structures is relevant to well performance for many completions.

Conclusions – Field Results

- Shaped charges developed for 10-200 mD sandstone have been proven effective in laboratory and field for shale formations.
- Improvements reported confirm previously reported results. (SPE 116226, SPE 122174, SPE 125901)
- It is likely that future work could develop a perforating system which is better suited for shale fields.

Conclusions – Shaped Charge Design

- Shaped charges can be optimized for performance different formations and applications.
- Shaped charge perforator design based upon targeted geometry improvements has been demonstrated to be effective in the lab and in the field for:
  - Sandstone, 10-200 mD
  - Sandstone, 300-1000 mD
  - Shale

Thank you!

The authors would like to thank Sean Brake and CNX Gas Company LLC for the generous sharing of their field experience.

For more: SPE144167

John Hardesty

Principal Research Engineer, GEODynamics, Inc.

john.hardesty@perf.com

Supporting Information

Permeability Map, Conventional Tunnel

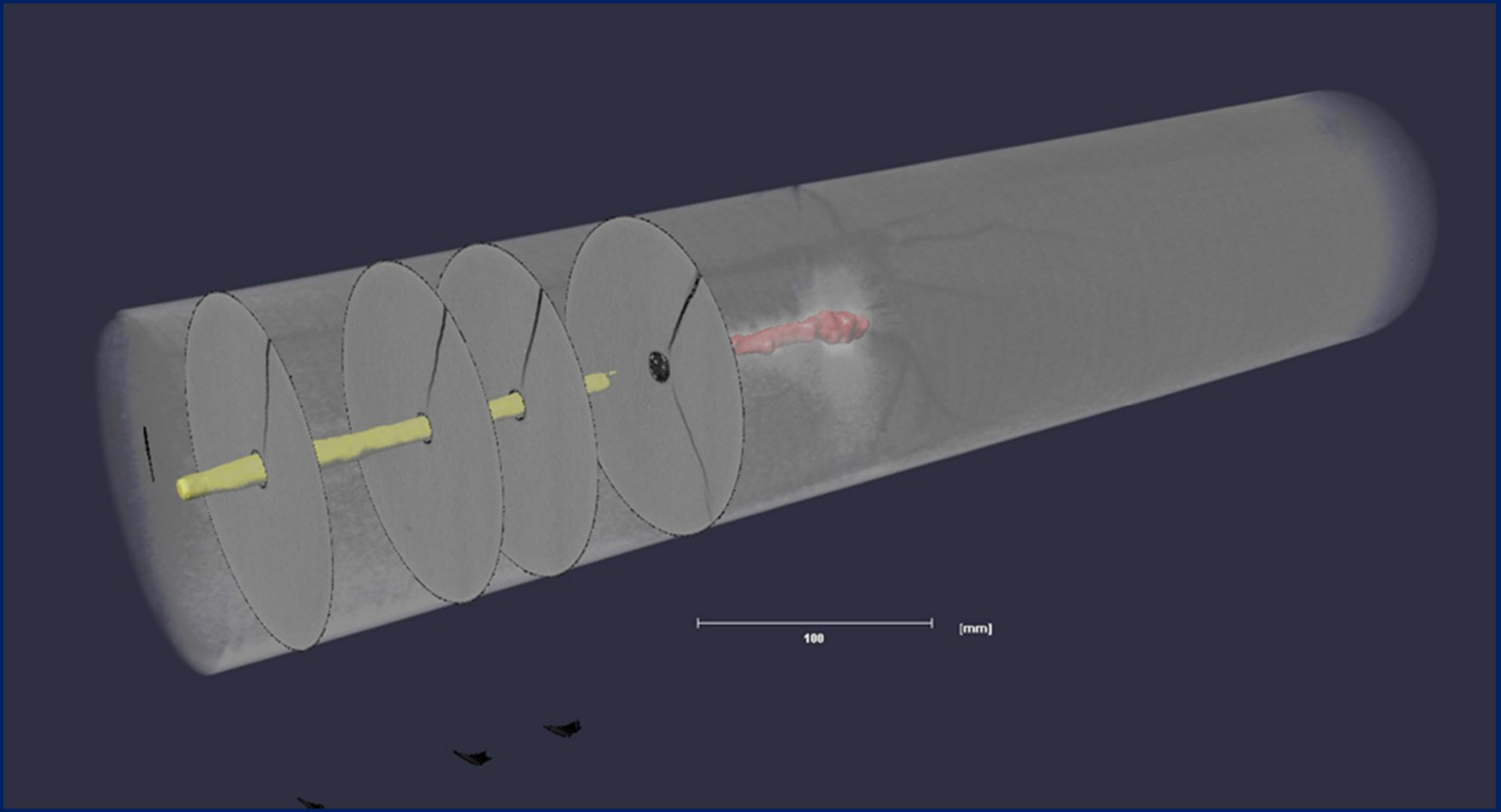

Permeability Map, Conventional Tunnel

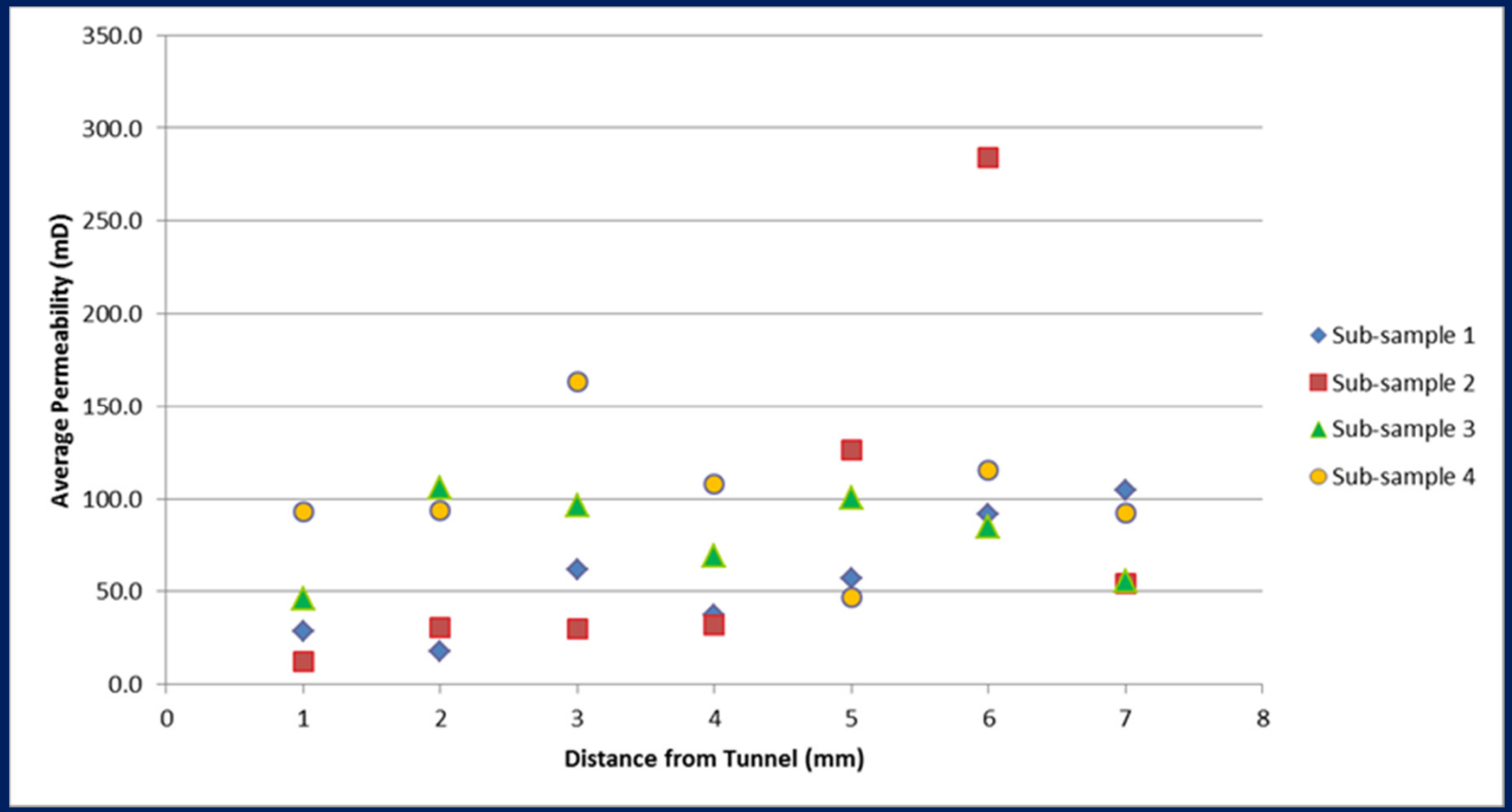

Permeability Map, Reactive Tunnel

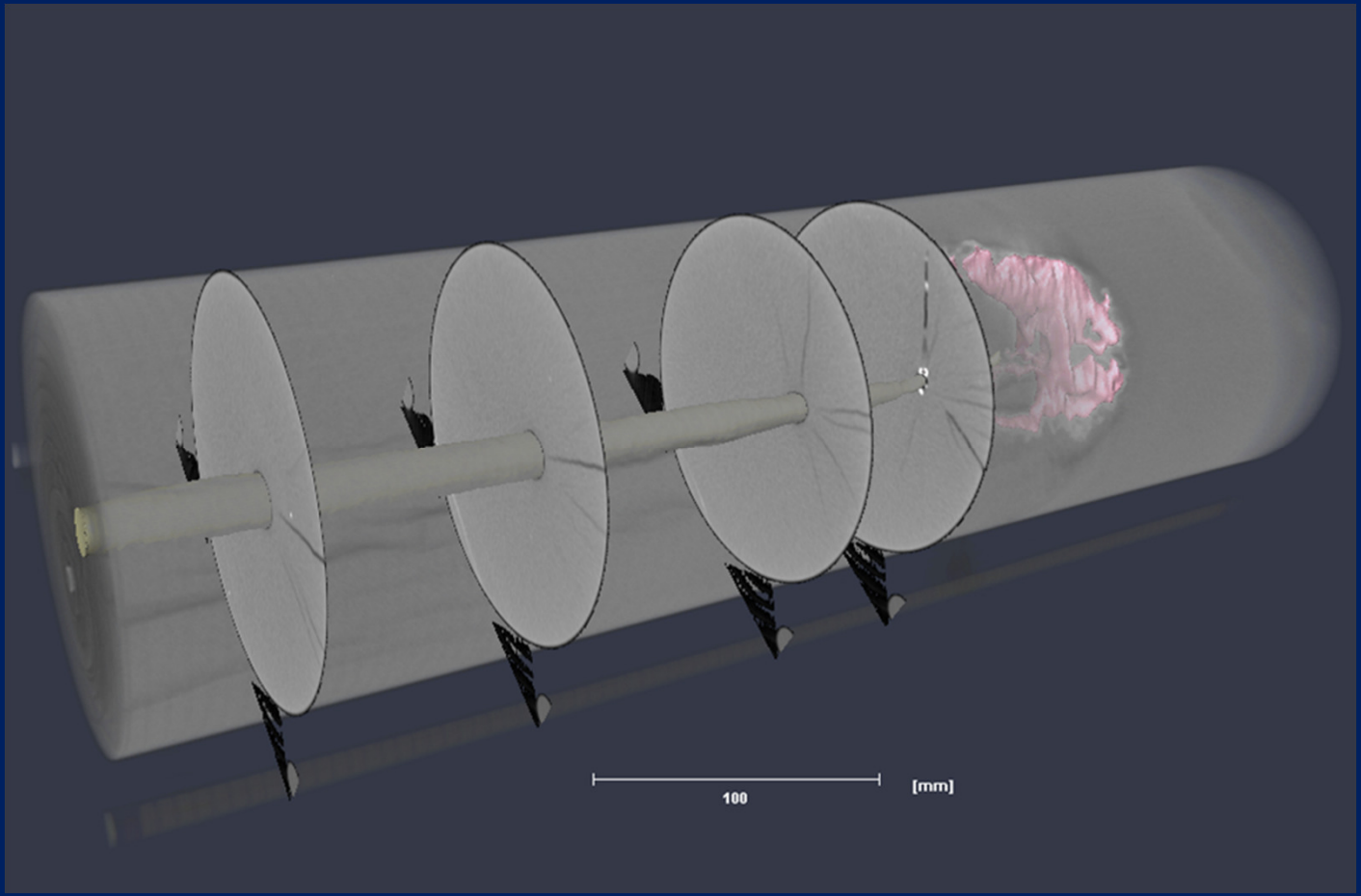

Permeability Map, Reactive Tunnel

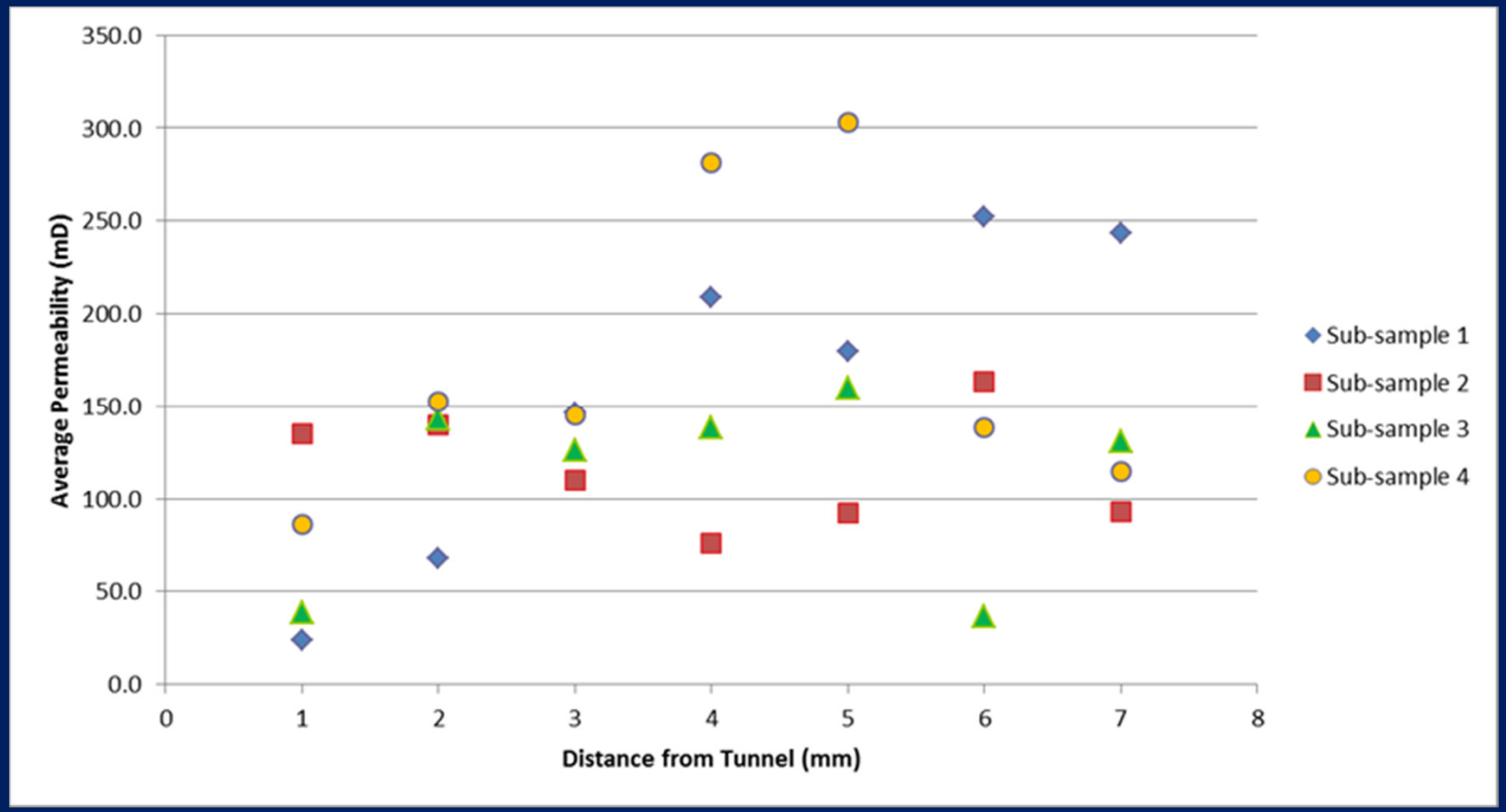

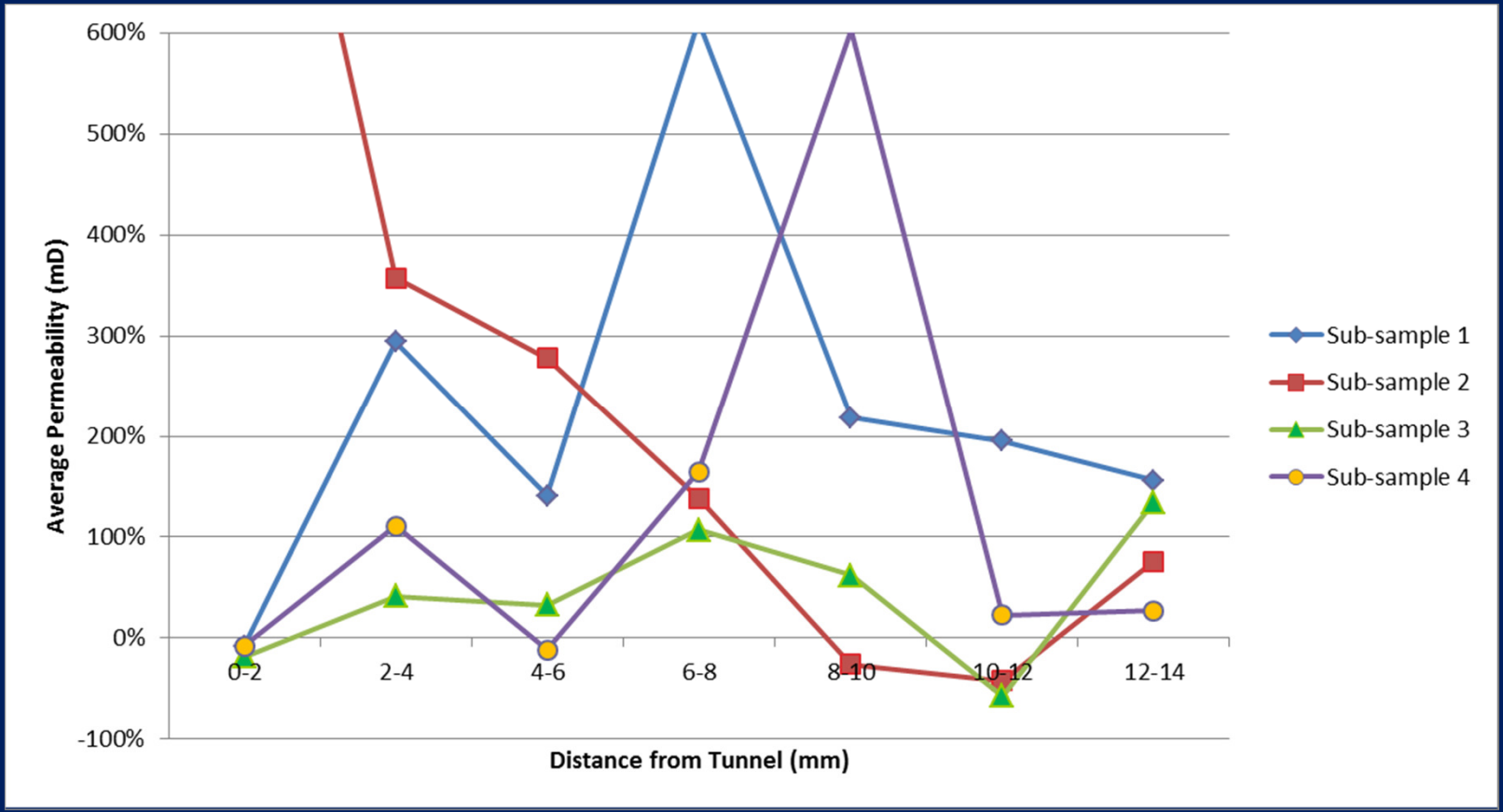
600%
500%
400%
300%
200%
100%
0%
-100%
Average Permeability (mD)
0-2
2-4
4-6
6-8
8-10
10-12
12-14
Distance from Tunnel (mm)
Sub-sample 1
Sub-sample 2
Sub-sample 3
Sub-sample 4

Conclusions – Permeability Distribution

- Permeability distribution is complex – uniform thickness damage model may be inadequate.
- Permeability distribution is a feature of charge design, in addition to test/field conditions.
- This reactive charge design (25g HMX) shows over all improvement in side wall permeability compared to conventional charge.

Perforating Simplifications

"Perforating is much more complex than we wish it was."

We want:

- Inexpensive and Repeatable Testing
- Simple Translation to Field Performance
- Predictive Software Models
- Simple Tunnel Geometry for Analysis
- Low Cost, High Performance

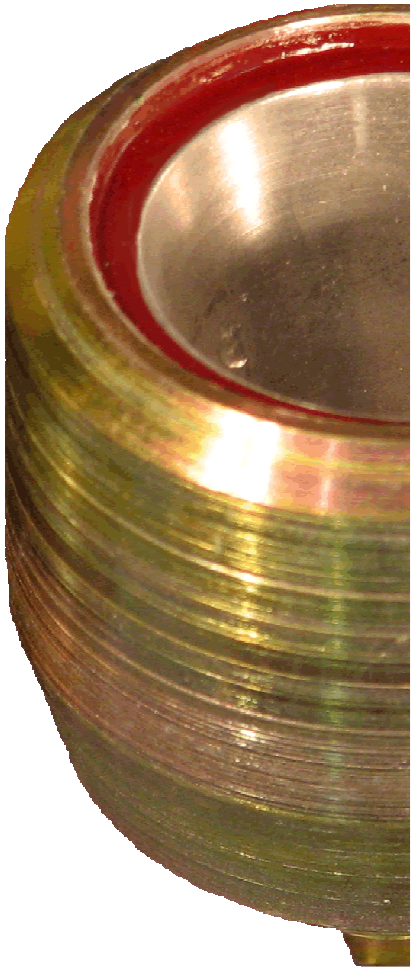

Perforating Simplifications

Testing Simplifications

- Unstressed Manufactured Target
- Translation to Field based on Stress Ratio

Consequences

- Charge Performance can Reverse
- Many Good Designs Overlooked
- OVERPREDICTION as we compete

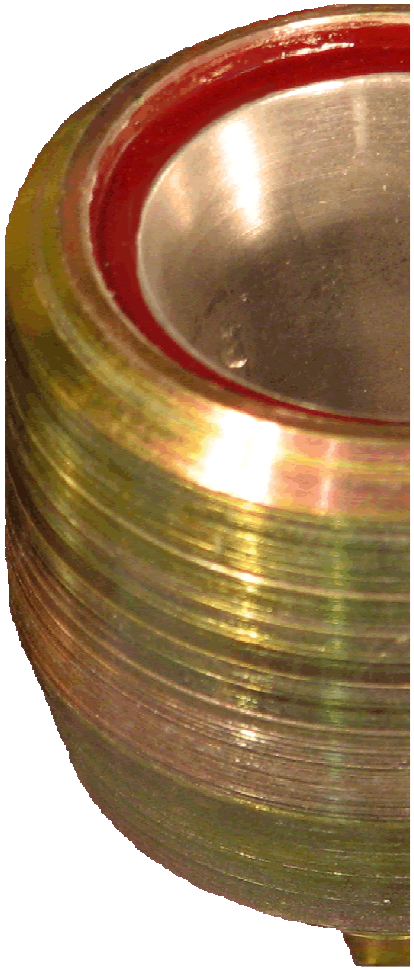

Reversed Charge Performance

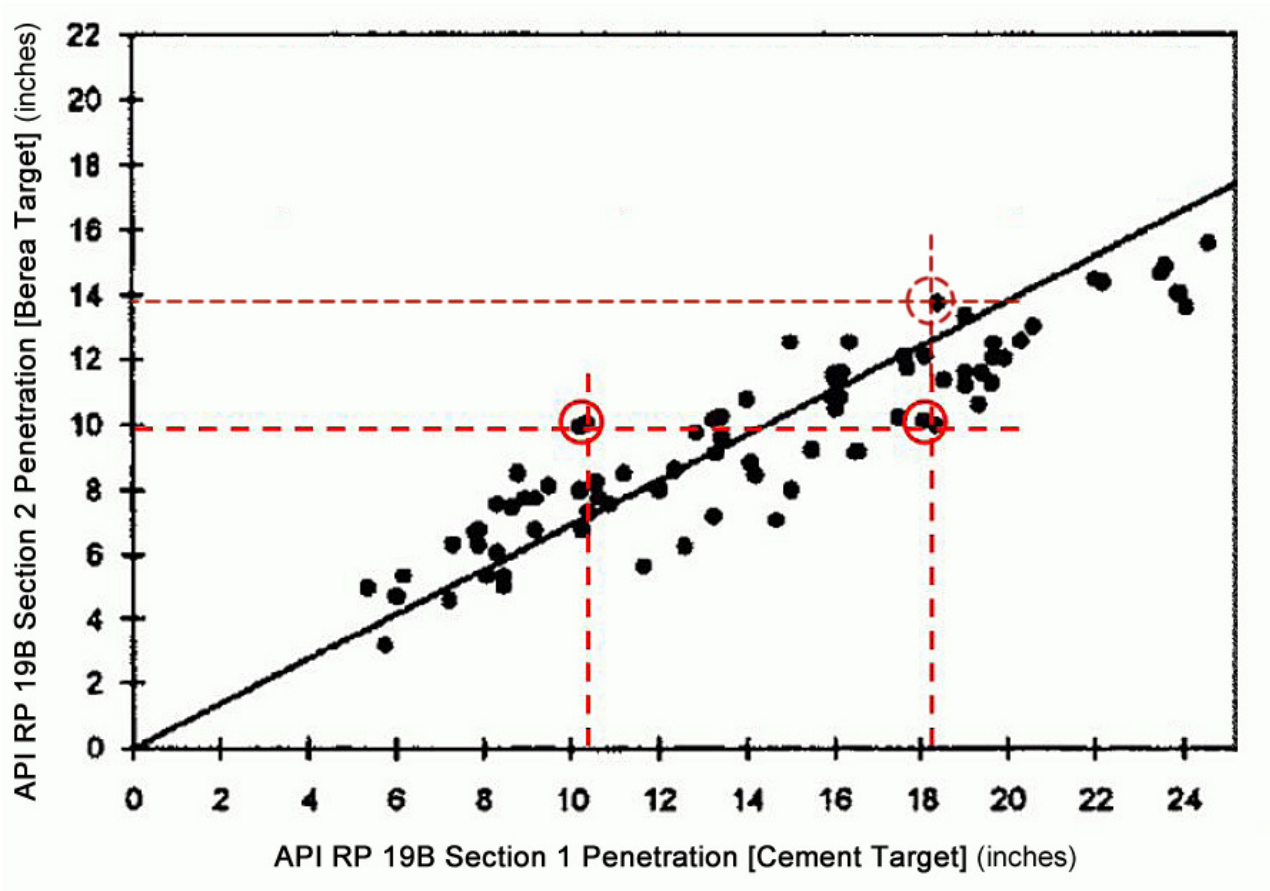

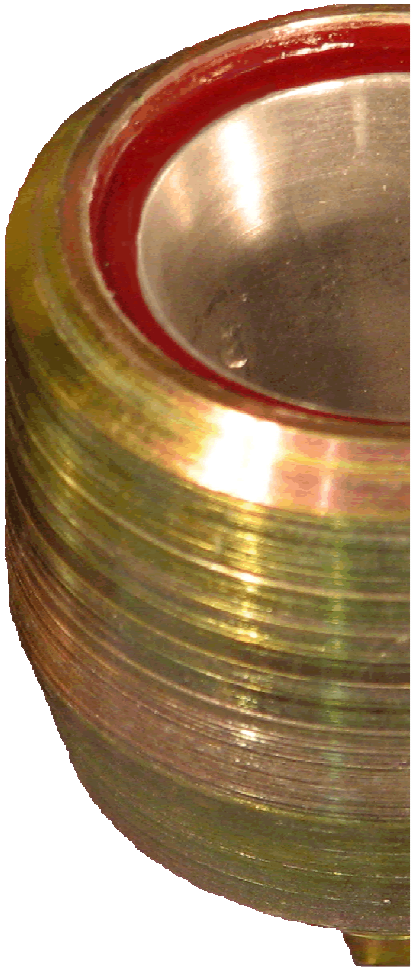

- Figure from SPE 27424, Ott, R.E. et al., “Simple Method Predicts Downhole Shaped-Charge Gun Performance.” Nov 1994

Industry Agreement – Over Prediction

- **SPE 124783** "Predicting Depth of Penetration of Downhole Perforators", Gladkikh et al, Baker
- **SPE 125020** "A Survey of Industry Models for Perforator Performance: Suggestions for Improvement", Behrmann et al, Schlumberger
- **SPE 127920** "New Predictive Model of Penetration Depth for Oilwell-Perforating Shaped Charges", Harvey et al, Schlumberger

"The primary conclusions of this work include: (1) historical penetration models tend to over predict penetration at downhole penetrations … partly due to the industry's continued reliance on performance into surface targets."

---SPE125020

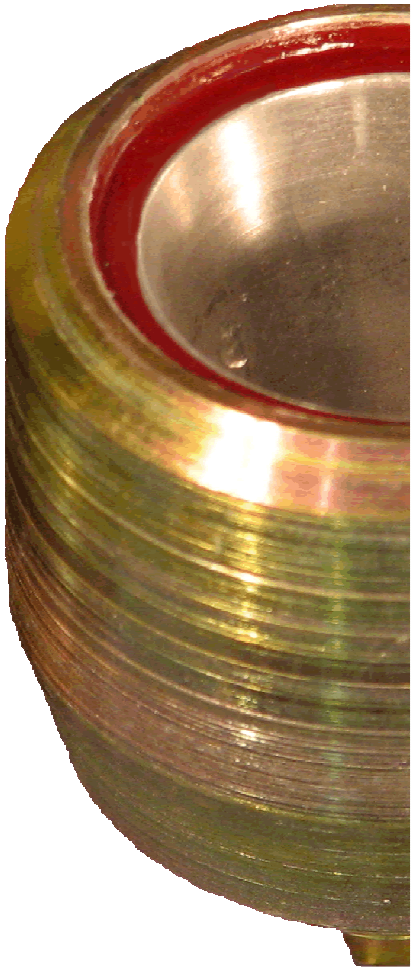

Introduction • Reactive Perforating

Using reactive materials to enhance shaped charge effectiveness

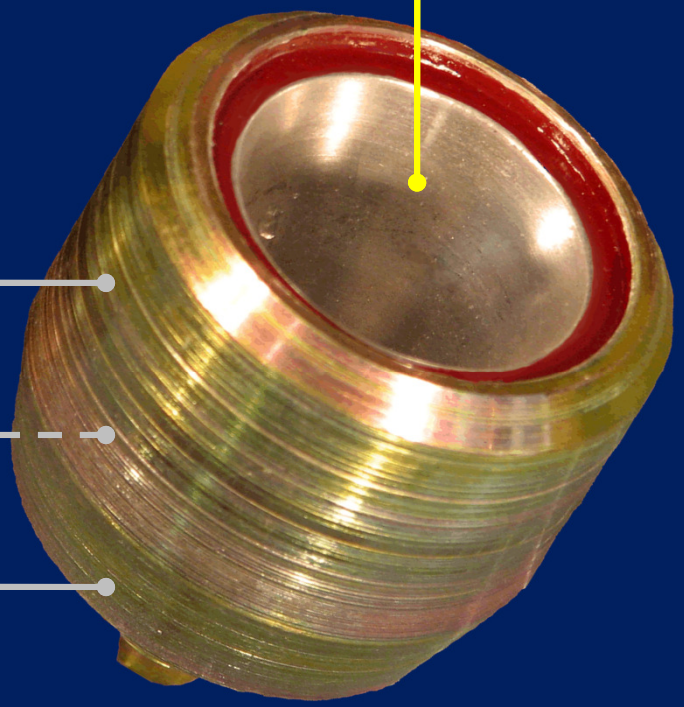

Reactive Perforating

- Designed for improved tunnel geometry
- Intermetallic reaction between charge liner materials, triggered by detonation pressure
- Exothermic reaction
  - Heats tunnel volume & near-tunnel pore space
  - Consumes supporting liner material
- Breaks up and expels debris from tunnel
- Effect occurs in each tunnel, independently
- Clean tunnels with less reliance on surge

Laboratory Evaluation

- More than 1,000 stressed rock test shots
  - "In the spirit of" API RP 19-B, Sections 2 & 4
- Sandstones, carbonates, others
- Wide range of stress states & configurations
- Comparative testing to conventional charges
- Evaluating:
  - Perforation geometry and clean-up
  - Relative flow performance (Section 4 type tests only)

Laboratory Evaluation • Example Results

Charge	Rock	Effective Stress	UB	Δ Clear Tunnel	Δ Lab Productivity
22.7g	11,000psi SSt	4,000psi	1500psi	+216%	n.a.
39g	11,000psi SSt	5,000psi	Balanced	+82%	n.a.
25g	5,000psi SSt	3,000psi	Balanced	+235%	+25%
25g	7,000psi SSt	4,000psi	500psi	+80%	+28%
6.8g	10,000psi SSt	4,000psi	Balanced	+35%	n.a.

Note of Caution: Lab tests are generally conservative. Significantly greater productivity improvements are being reported in the field.

Field Applications • Shoot and Produce

- Wells in which no stimulation is required
- Success = increased productivity
- Bonus = reduced cost, complexity, risk
  - Eliminate underbalance, release rig (TCP to W/L)
- Examples:
  - Thailand • +50% initial productivity based on performance of appraisal wells perforated with premium system
  - Pakistan • 3x productivity of previous best-in-field well
  - North Sea • Equivalent productivity with 1 run vs. 3 runs

Field Applications • Re-Perforation

- Generally a tough task for perforators
  - Effective stress increases as reservoir pressure drops
  - Hard to apply underbalance with open perforations etc.
- Success = increased productivity
- Examples:
  - UK • 30x productivity after re-perforation (best in field)
  - USA • 10x productivity … more than 2x the increase seen re-perforating offset wells with conventional systems
  - USA • 10x increase in gas well production after re-perforation … already shot twice with premium DP system

Field Applications • Prior to Stimulation

- Success = reduced pressure, increased rate, improved reliability
- Bonus = eliminate acid, avoid cleanouts
- Examples:
  - USA • 30-70% reduction in fracture initiation pressure (Barnett, Fayetteville, Marcellus…)
  - Canada • Reduced perforation friction, negligible tortuosity, eliminate need for acid spear
  - USA • 30% increase in initial productivity as result of 10% increase in treating rate at same pumping pressure

Field Applications • Limited Entry

- Success = consistent, predictable outflow area for injectant distribution along wellbore
- Bonus = eliminate rig-based breakdowns
- Examples:
  - Canada • Controlled EHD perforator for steam injection
  - Oman • Controlled EHD perforator under development for steam injection – assurance of clean tunnels will eliminate current practice of breaking down each set of holes using straddle packer assembly on drill pipe

Field Applications • Unconsolidated Rock

- Success = reduce TSS at same/higher rate due to greater number of open tunnels and reduced flux rate
- Example:
  - Oman • Well produced 2x gross liquids of comparable offsets (unfortunately mostly water…) but only 10% of the field average sand rate