Dynamic Underbalance Perforating Practice in Western Siberia Russia: Challenges, Leanings and a Case Study

Presented by: Igor Savchenko (Salym Petroleum Development)

Co-Authors: Mark Brinsden (Shell)
Klaus Scherwitzel (Salym Petroleum Development)

International Perforating Symposium
Galveston, Texas, USA
May-2014

Salym Project

Production
Starting from 2004
Peaked 177 kbpd oil in 2011
Currently 133 kbpd (21 km3/d)

Active Well Stock
514 ESP lifted Oil producers
244 Water injectors
11 Water supply wells

Well Activities
4 Drilling rigs(100 wells/yr)
17 W/O hoists (600 jobs/yr)
3 Coiled Tubing Units
1 Frac Fleet

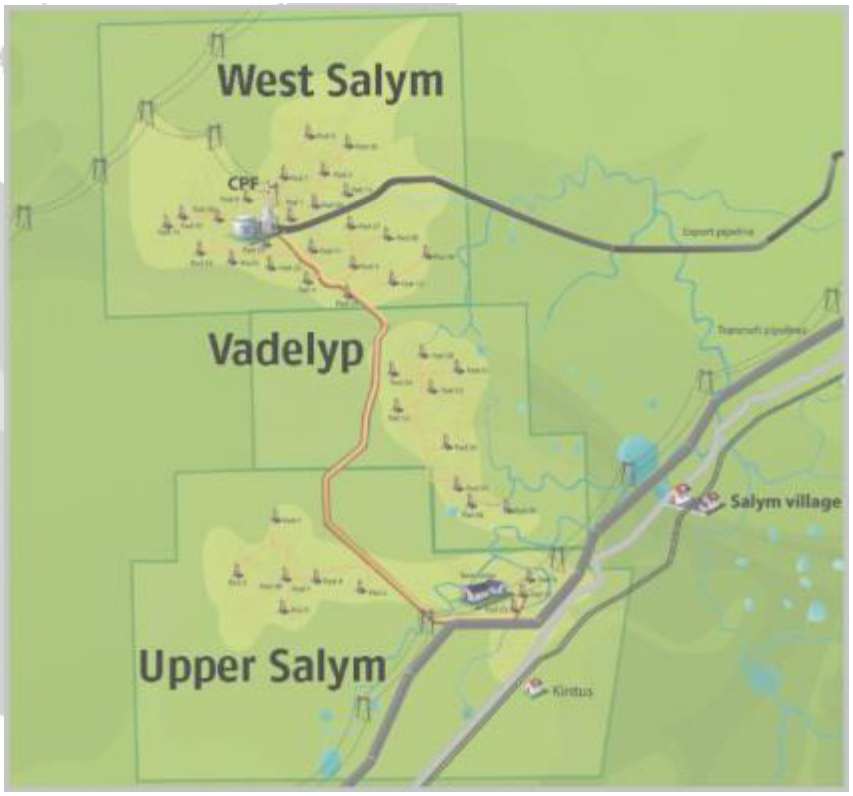

Salym Perforating practice

- Casedhole perforated completion: 4 ½” TCP guns with 5 SPF Premium DP charges and Static UB 60-90 bar.

- Re-perforating with Dynamic UB technique was used to improve well productivity by perforation cleanup effect.

- Two well cases will be reviewed with similar reservoir characteristics and re-perforating designs but opposite results.

Re-perforating candidate: Well-A

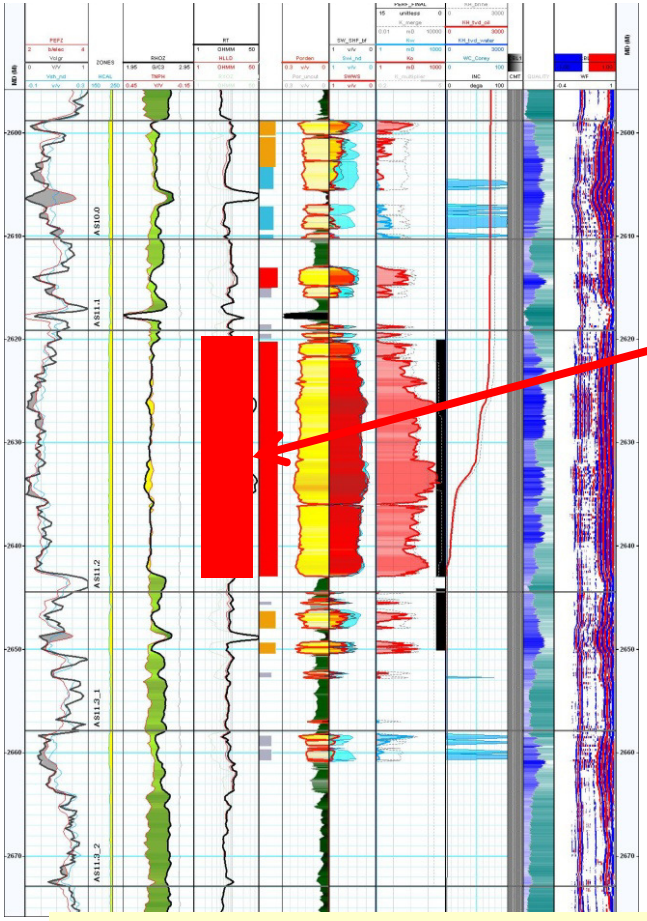

- S-shaped well (TVD=2200 m), oil bearing sandstone with initial Pres=225 bar
- Net pay: 23 m with average permeability 70 md and porosity 0.17
- Casedhole perforated completion: 4 ½" TCP guns with 5 SPF Premium DP charges
- Well parameters: Qgross=197 m3/d, Pwf=65 bar, Pres=200bar

DUB re-perforating proposed

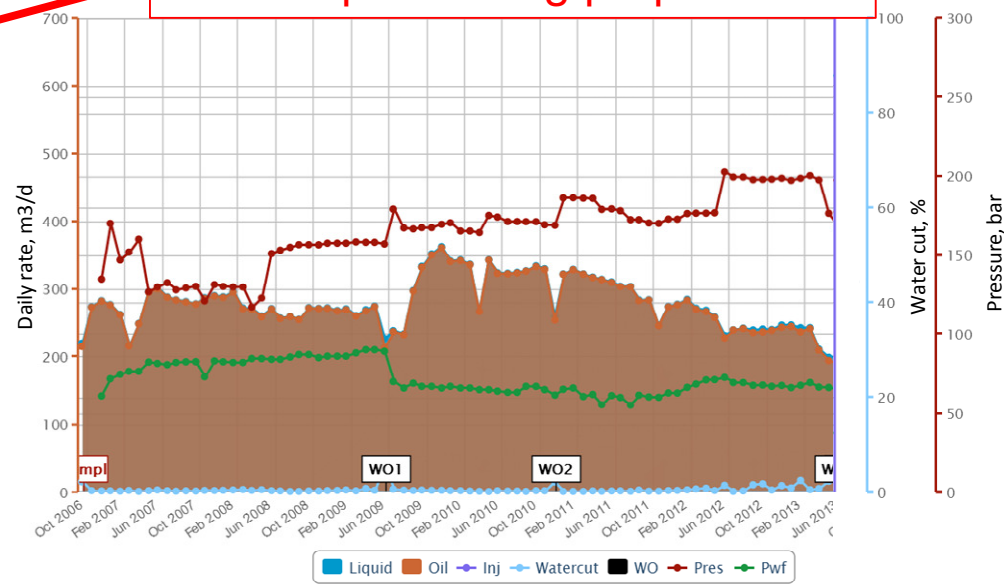

- Significant near wellbore impairment was suspected vs. log "kh"
- Well and perforation performance simulator indicates total skin=13 when assuming perforating crushed zone inputs: thickness=17 mm; Permeability factor=6 % of initial

Re-perforating design: Well-A

- 4 ½" TCP gun with 5 SPF Premium DP charges
- Fast DUB effect
  - ✓ Punched chambers
  - ✓ Selective Guns loading
  - ✓ Lower charge density: 2.2 SPF in average
  - ✓ Internal gun pressure is 43% of fully charged
- Slight Static UB (30bar) – for inflow performance test (ESP sizing)
- High resolution pressure gauge – to confirm actual DUB

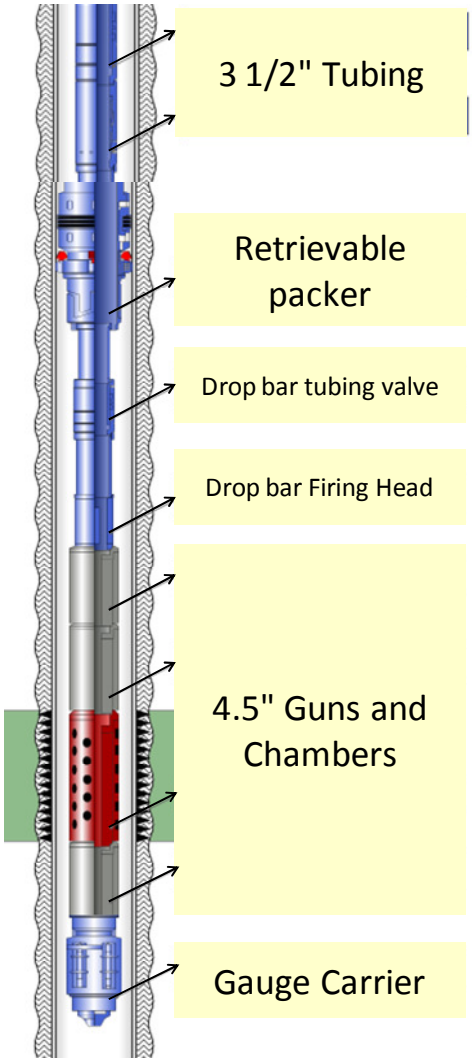

Re-perforating results: Well A

- ✓ Pressure gauge confirm DUB
  - Fast surge effect (176 bar) starting from 15 ms
- ✓ Well performance matched model
  - Inputs: Crushed zone thickness = 4 mm;
    Permeability factor = 50 % of initial
  - Resulting total skin =3.5
- ✓ Dynamic Gun modeling results
  - Total skin = 1.7
  - Crashed zone thickness = 4 mm
- ✓ Confirmed actual performance (FOI~3)

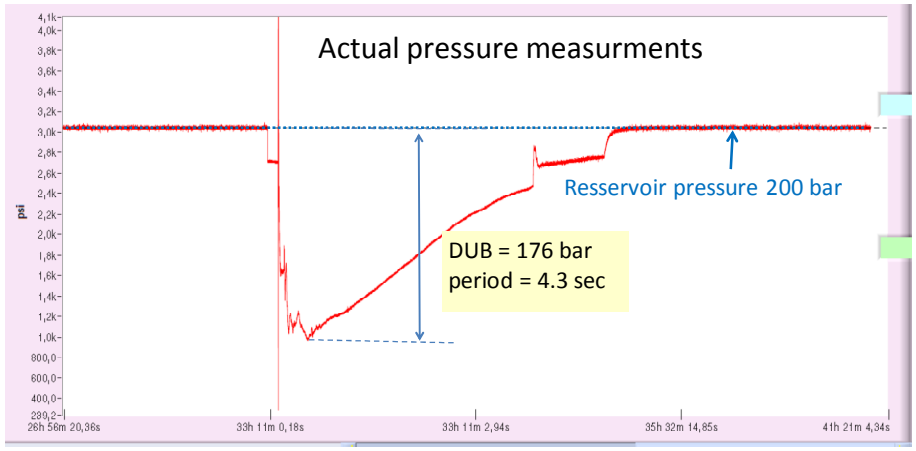

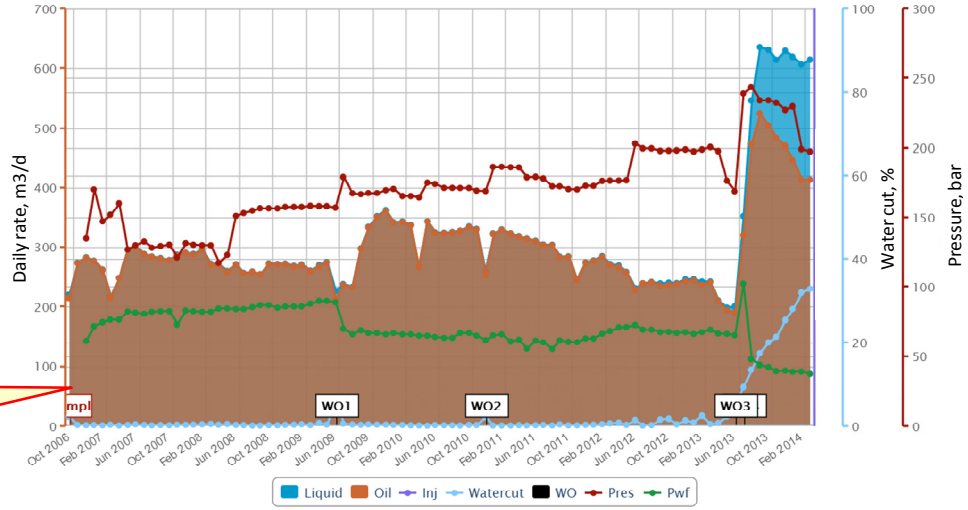

Successful Re-perforating

Re-perforating candidate: Well-B

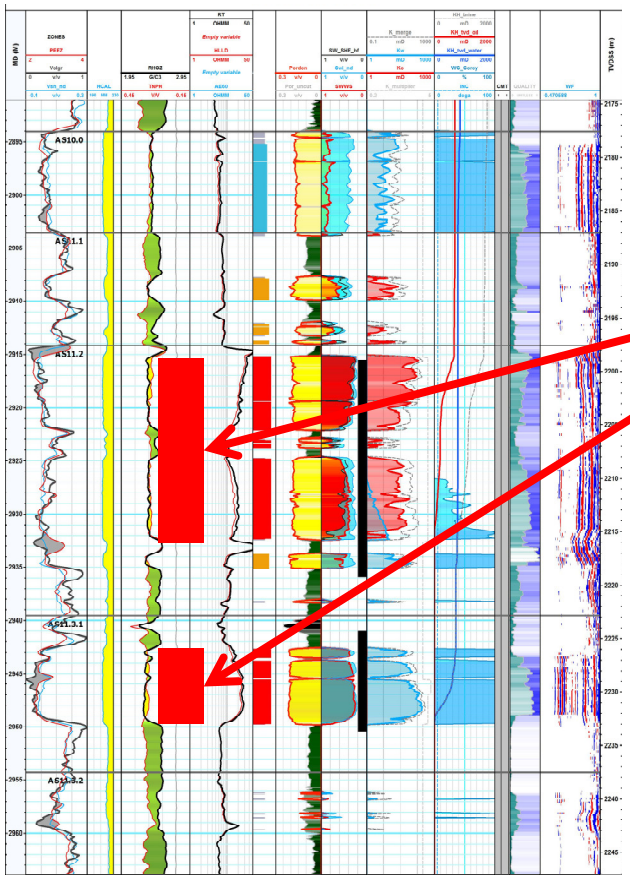

- S-shaped well (TVD=2200 m), oil bearing sandstone with initial Pres=225 bar
- Net pay: 33+12 m with average permeability 40 md and porosity 0.15
- Casedhole perforated completion: 4 ½" TCP guns with 5 SPF Premium DP charges
- Well parameters: Qgross=197 m3/d, Pwf=65 bar, Pres=215bar

DUB re-perforating proposed

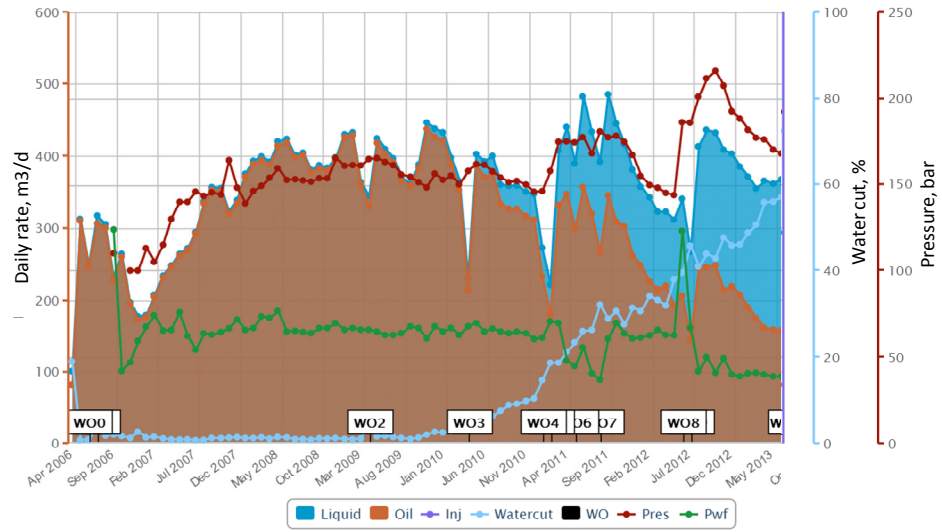

- Significant near wellbore impairment was suspected vs. log "kh"
- Well and perforation performance simulator indicates total skin=13 when assuming perforating crushed zone inputs: thickness=15 mm; Permeability factor=22 % of initial

Re-perforating design: Well-B

- 4 ½" TCP with 5 SPF Premium DP charges
- Fast DUB effect
  - ✓ Punched chambers
  - ✓ Selective Guns loading
  - ✓ Lower charge density: 3.1 SPF in average
  - ✓ Internal gun pressure is 61% of fully charged
- Slight Static UB (30bar) – for inflow performance test (ESP sizing)
- High resolution pressure gauge – to confirm actual DUB

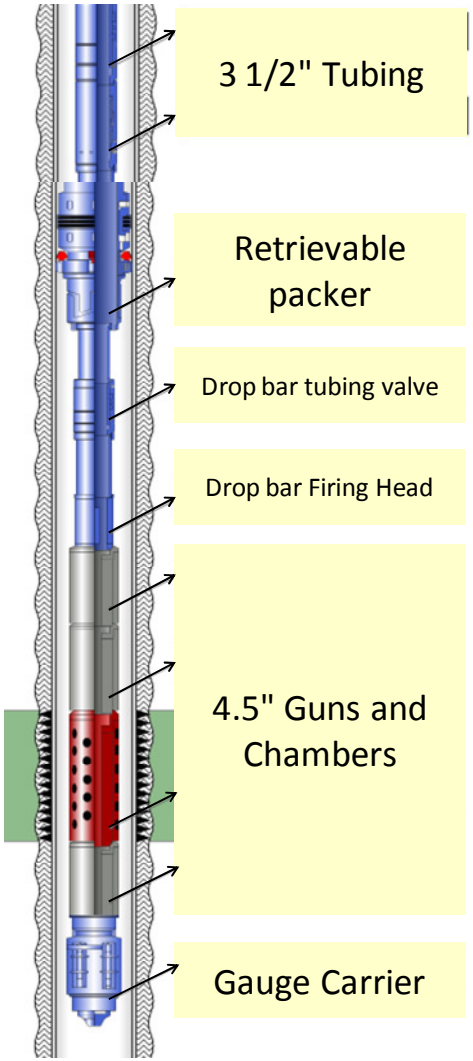

Re-perforating results: Well B

- ✓ Pressure gauge confirm DUB
  - Fast surge effect (110 bar) starting from 20 ms

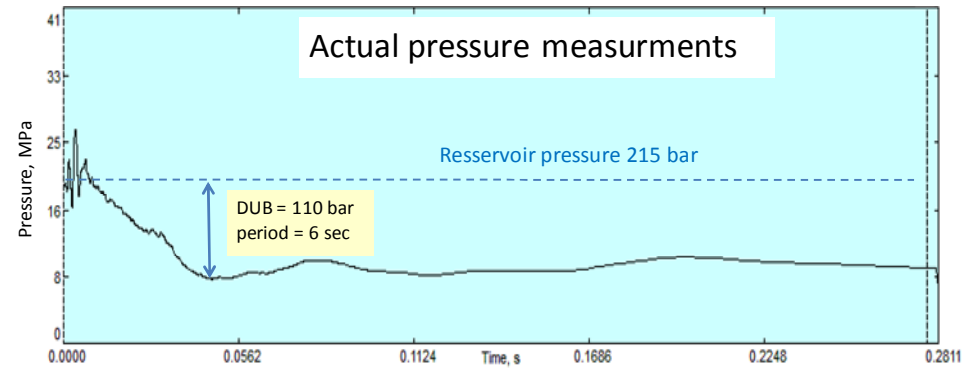

- ✓ Well performance matched model
  - Inputs: Crushed zone thickness = 15 mm;
    Permeability factor = 10 % of initial
  - Resulting total skin =7

- ✓ Dynamic Gun modeling results
  - Total skin = 2.2
  - Crashed zone thickness = 4 mm

- No effect on well productivity

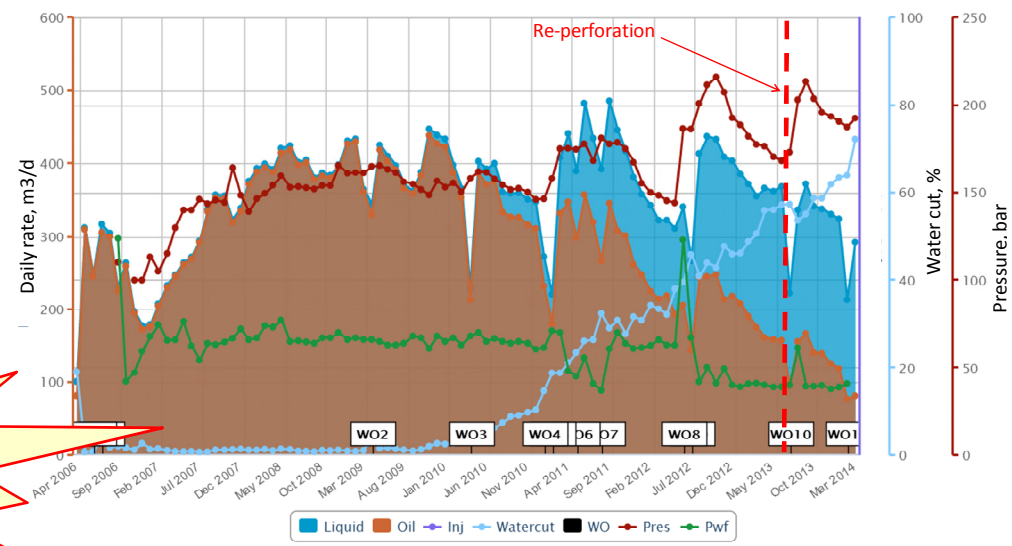

Unsuccessful Re-perforating

Dynamic gun modeling

Well-A

- Dynamically modeled pressure behavior is consist with actual recorder data
- Pressure behavior are same for chambers and loaded perforator parts
- Fast surge DUB achieved: 9 ms

Well-B

- Dynamically modeled pressure behavior is consist with actual recorder data
- Pressure at recorder are influenced by nearest punched chamber
- DUB at loaded guns is 50 bar lower compared to recorder
- Delayed surge DUB cross at production zone: 40ms

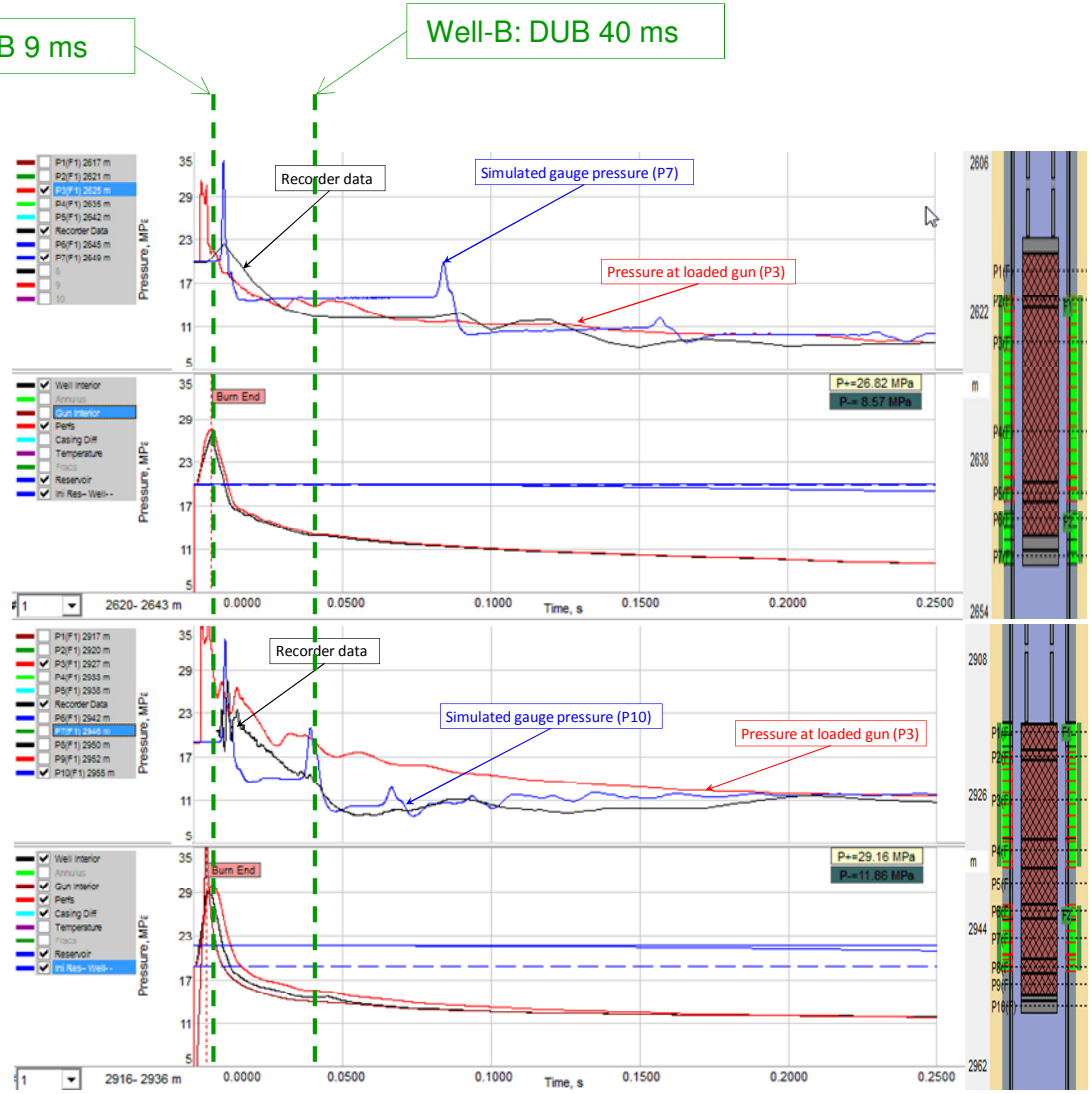

Conclusions

- For well-A re-perforation both production data and Dynamic Gun modeling prediction are fully consistent.
- Re-perforation in Well-B was not successful and does not match Dynamic Gun modeling predictions.
- Internal gun pressure for Well-B was 60 bar higher when compared to Well-A because of the higher shot density
- Fast acting surge Dynamic UB at production zones was significantly delayed in Well-B (40 ms) compared to Well-A (9 ms).
- The gun shot density and gun pressure were not designed correctly for case of Well-B.
- Time onset and magnitude of a Dynamic UB can be a critical parameter for the perforation cleanup efficiency. In case of well-B the DUB was not fast or/and large enough to improve well's productivity.

Recommendations

- It is good practice for operator to carry out their own detailed Perforating design using Dynamic Gun modeling independently of contractor recommendations.

- High Speed recorder data was used on this contract to confirm that a Fast DUB job has been executed. BUT the High Speed recorder can be influenced by surge chamber pressure that may be very different to gun pressure behavior at production zones (Well-B). It is recommend that HS Gauges to locate closer to the perforated interval and not adjacent to surge chamber ports, which in this case generated a false Fast DUB reading for well-B.